iJP

it just prints.

Operator's Manual

WWTC.iJP and WWTC.iJP2 Models

WWTC.iJP2

WWTC.iJP

WORLDWIDE TICKETCRAFT

Visit us online: **worldwideticketcraft.com**

• Specializing in custom designed and generic thermal products •

Call Us Toll Free: 877.533.3114

Copyright Information

Limitation of Liability

In no event shall Worldwide Ticketcraft be liable to the purchaser for any indirect, special or consequential damages or lost profits arising out of or relating to Worldwide Ticketcraft's products, or the performance or a breach thereof, even if Worldwide Ticketcraft has been advised of the possibility thereof. Worldwide Ticketcraft's liability, if any, to the purchaser or to the customer of the purchaser hereunder shall in no event exceed the total amounts paid to Worldwide Ticketcraft hereunder by the purchaser for a defective product.

In no event shall Worldwide Ticketcraft be liable to the purchaser for any damages resulting from or related to any failure or delay of Worldwide Ticketcraft in the delivery or installation of the computer hardware, supplies or software or in the performance of any services.

Some states do not permit the exclusion of incidental or consequential damages, and in those states the foregoing limitations may not apply. The warranties here give you specific legal rights, and you may have other legal rights which vary from state to state.

Firmware (Software) Agreement

The enclosed Firmware (Software) resident in the Printer is owned by Licensor or its suppliers and is licensed for used only on a single printer in the user's Trade or Business. **The User agrees not to, and not to authorize or permit any other person or party to, duplicate or copy the Firmware or the information contained in the non-volatile or programmable memory.** The firmware (Software) is protected by applicable copyright laws and Licensor retains all rights not expressly granted. In no event will Licensor or its suppliers be liable for any damages or loss, including direct, incidental, economic, special, or consequential damages, arising out of the use or inability to use the Firmware (Software).

Information in this document is subject to change without notice and does not represent a commitment on the part of Worldwide Ticketcraft Corporation. No part of this manual may be reproduced or transmitted in any form or by any means, for any purpose other than the purchaser's personal use, without the expressed written permission of Worldwide Ticketcraft Corporation.

Important Safety Instructions

This printer has been carefully designed to provide years of safereliable performance. As with all types of electrical equipment, however, there are a few basic precautions that should be taken to avoid personal injury or damage to the device:

- Carefully read the installation and operating instructions provided with the printer.
- Read and follow all warning and instruction tickets on the printer.
- Place the printer on a flat, stable surface.
- Do not insert anything into the ventilation slots or openings on the printer.
- Do not place the printer on or near a heat source.
- Do not use the printer near water. Never spill liquid into the printer.
- Be certain the power source is within the voltage rating and frequency listed for the printer. If you are unsure, check with your dealer, an electrician, or local power company.
- Do not place the power cord where it can be stepped on. If the power cord becomes damaged or frayed, replace it immediately.
- Only qualified, trained service technicians should attempt to repair the printer.

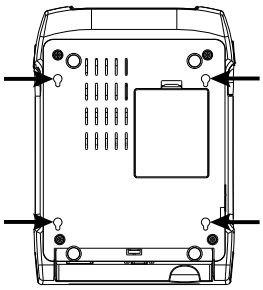

Cut-outs are not intended for wall-mount use.

Agency Compliance and Approvals

UL60950-1, Second Edition, Information Technology Equipment
CSA C22.2 No. 60950-1-03, Second Edition

The manufacturer declares under sole responsibility that this product conforms to the following standards or other normative documents:

EMC:EN 55022 (2006) Class A
EN 50024 (1998)
IEC 60950-1 :2001, Second Edition

Safety:This product complies with the requirements of IEC 60950-1:2001, Second Edition

Gost-R

GB4943-2001, GB9254-1998, GB17625.1-2003

FCC: This device complies with FCC CFR 47 Part 15 Class A.

☑ **Note:** This equipment has been tested and found to comply with the limits for a Class A digital device, pursuant to Part 15 of the FCC Rules. These limits are designed to provide reasonable protection against harmful interference when the equipment is operated in a commercial environment. This equipment generates, uses, and can radiate radio frequency energy, and if not installed and used in accordance with the instructions in this manual, it may cause harmful interference to radio communications. Operation of this equipment in a residential area is likely to cause harmful interference in which case the user will be required to correct the interference at his own expense.

Revision A

Contents

1 Getting Started

1.1 Introduction

The WWTC.iJP printer (hereafter referred to as "the printer") is user-friendly thermal printing device that blends quality and durability in an affordable package to meet all of your ticketing needs. This manual provides the information necessary to operate and maintain the printer.

To begin printing tickets, tickets or tags, refer to the instructions included with your ticketing software program. For your convenience, a Windows® printer driver can be found on the Accessories USB FLASH DRIVE, or it can be downloaded from our website at http://www.worldwideticketcraft.com. (If you wish to write custom programs or ticket formats, a copy of the *Programmer's Manual* also is included for your reference, or the manual can be downloaded.)

1.2 Unpacking the Printer

After removing the printer from the packaging material, check the contents of the box. In addition to the printer, the following items should be present:

- Power Supply
- Accessories USB FLASH DRIVE
- Any special or additionally ordered items

Additional Requirements

The following items are necessary to generate tickets:

- Parallel, Serial, USB, or Ethernet cable, see Section 2.2.2 for details.
- Applicable media; see Appendix A for details.

Contact customer support or your sales representative for advice on the media and software that may best be suited for your application.

It is a good idea to save all packaging material for future use.

1.3 Kensington Security Slot

WWTC.iJP2 modules equipped with the Key Lock Option also include a built-in Kensington Security Slot with a metal backing plate. The Kensington slot allows you to physically secure the printer from being stolen by tethering it to a larger object like a desk or counter. There are many security solutions offered by Kensington that are compatible with the slot.

Visit http://www.kensington.com for a full line of locking options and accessories.

The Kensington Security Slot has been the industry standard since 1990, giving customers the best option for physical security of computer and electronic equipment.

❶ Kensington Security Slot

2 Printer Setup

2.1 Introduction

This section explains how to connect your printer and load media (including ribbon, if equipped for thermal transfer operation).

2.2 Connecting the Printer

2.2.1 Power Connections

The printer is powered by an external auto-ranging power supply, which connects between the printer and an electrical outlet. Ensure that the operating ranges of the power supply are compatible with your electrical service, (see Appendix A for details) then connect power as follows:

☑ Before connecting power to the printer, ensure that the Power Switch is in the OFF (O) position.

1) Connect the Power Supply to Power Jack of the printer.

2) Connect the AC Power Cord to the Power Supply.

3) Connect the AC Power Cord to an Electrical Outlet.

❶	Power Supply
❷	AC Power Cord
❸	Power Jack
❹	Electrical Outlet

2.2.2 Interface Connections

Before connecting interface cables to the printer, ensure that the Power Switch is in the OFF (O) position.

1	Ethernet Port
2	USB Port
3	Serial Port
4	USB Host Port
5	Parallel Port

Cable Requirements

Choose the correct cable when interfacing the printer to the host:

- **The Parallel Port** (optional) supports parallel communications via a 36-pin male mini-Centronics® connector. Bi-directional communications (forward and reverse channels) is supported when an IEEE 1284 compliant cable and supporting host software is used.
- **The Ethernet Port** supports Wired LAN communications (see Appendix B for information).
- **The Serial Port** supports RS-232C communications via a DB-9 connector with specific pin-outs (interface cable part numbers and pin-outs are given below; contact your reseller to order). Serial port settings are menu-selectable and must match the host settings.

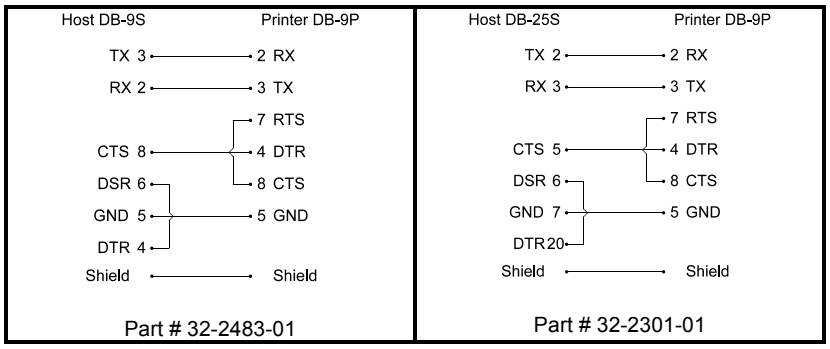

- **The USB Port** supports high-speed serial communications and requires a standard USB interface cable.
- **The USB Host Port** (optional). The USB Host Port allows the printer to accept external USB memory devices for storing graphics, ticket formats, fonts, and firmware. The port can also accept an USB keyboard for standalone, direct data (Line mode) input applications; see the Programmer's Manual for more information on how to utilize the port.

The printer automatically establishes communications with the first port through which valid data is received. Afterward, a timeout period must be exceeded (or power must be cycled OFF and ON) to change the established communications port.

2.2.3 Windows Driver and USB Connection

USB connection to PC requires installation of the windows driver. All the files necessary for installation are located on the Accessories USB Flash Drive. Connect the printer to the host PC via a standard USB Cable, turn on the printer and follow the steps below. The following steps are for Windows 8. Other versions of Windows may vary slightly.

Step A: Windows Port Driver Installation:

1) Turn on the printer and wait until the start-up initialization is complete. If printer is connected to the host via USB cable the PC will detect the printer. Depending on the version of windows the "Found New Hardware" wizard may launch. In this case Click the "Cancel" radio button and proceed to step 2.

2) Insert the Worldwide Ticketcraft USB Flash Drive that came with your printer into a USB slot on your host computer.

3) Windows Explorer will launch automatically. (Note: Depending on which version of Windows you are running a Worldwide Ticketcraft brochure may also launch automatically)

4) In Windows Explorer, navigate to the USB Flash Drive ticketed "FREE SPACE". Open the file names "Accessories Menu". Once the menu launches, click on "Install Driver" menu item. The windows driver wizard will launch.

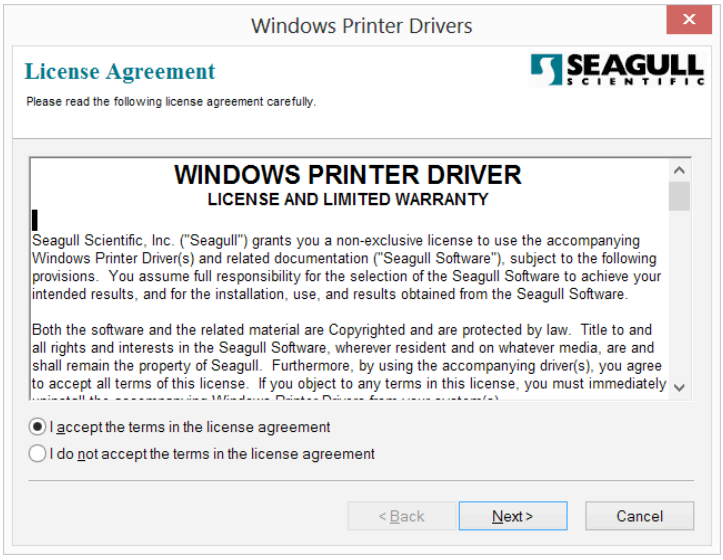

5) Click “Next” to install driver to C:/Seagull directory

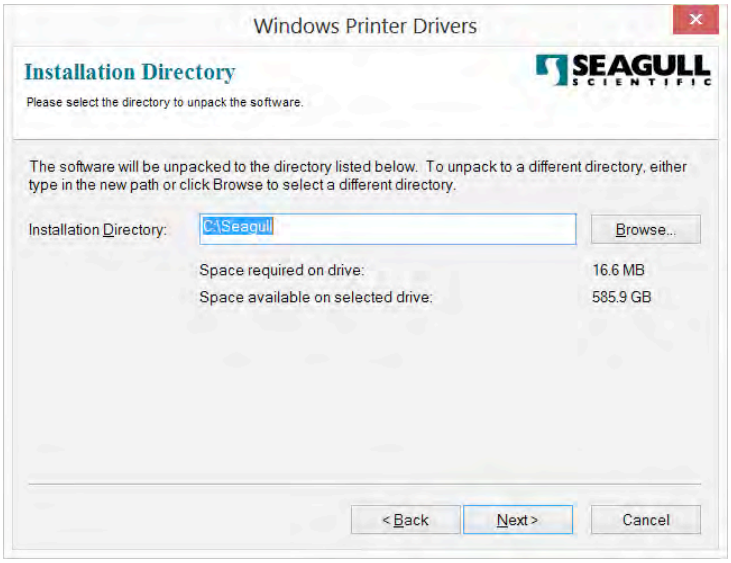

6) Check “Run Driver Wizard after unpacking drivers” checkbox and then click “Finish”.

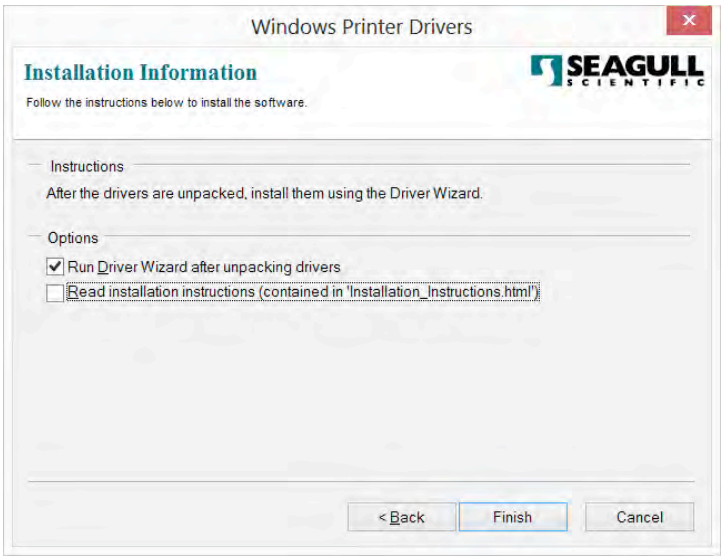

7) Select the “Install Printer Drivers” radio button and click “Next.”

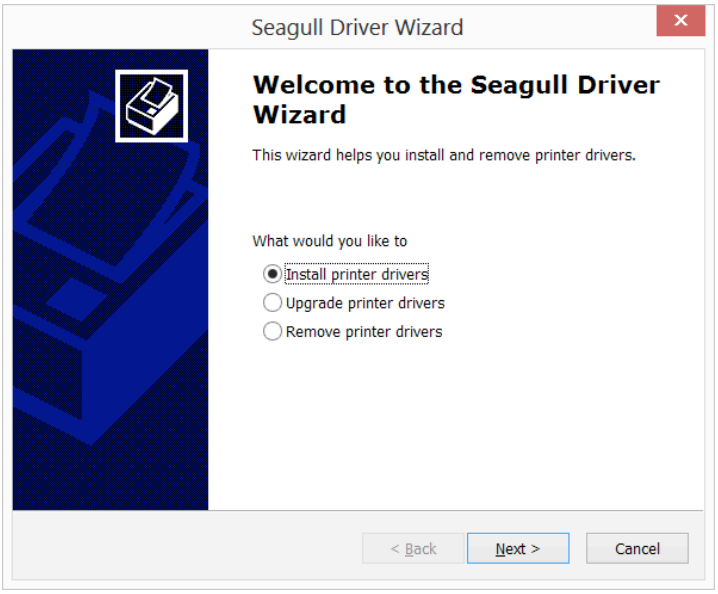

8) If this screen appears, click "Continue Anyway"

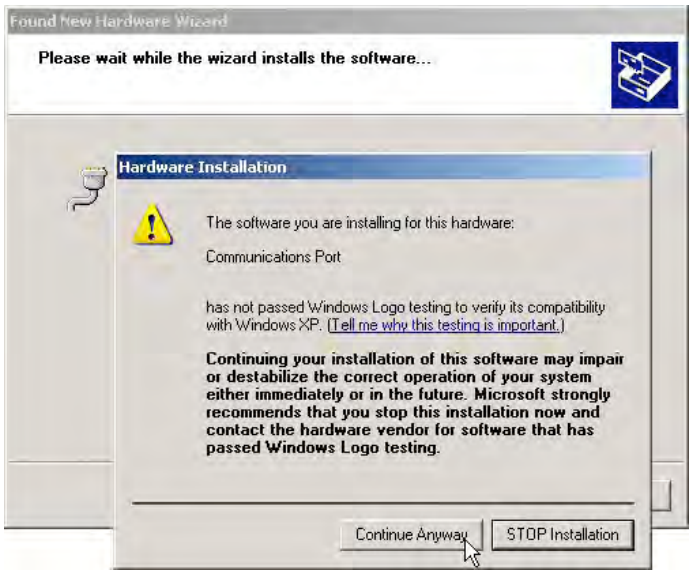

9) Your WWTC.iJP will be detected and appear in the box. Click "Next" to assign the port to the printer.

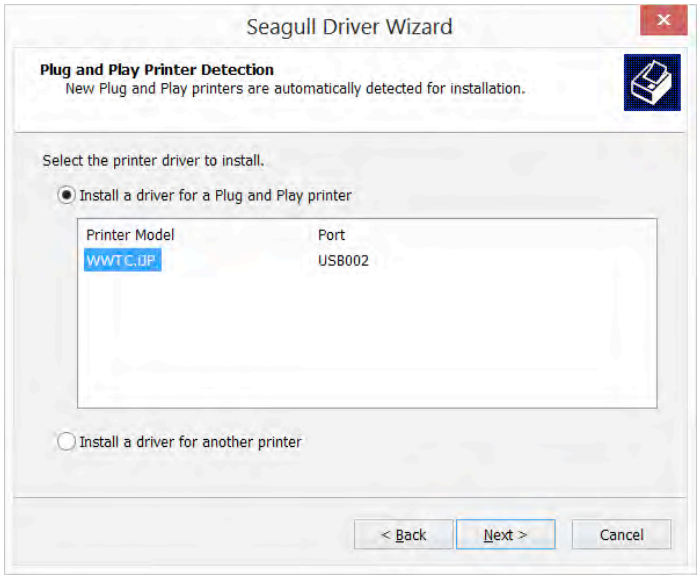

10) You may choose to make the printer the default printer or to share the printer with other network users. Click "Next" to continue.

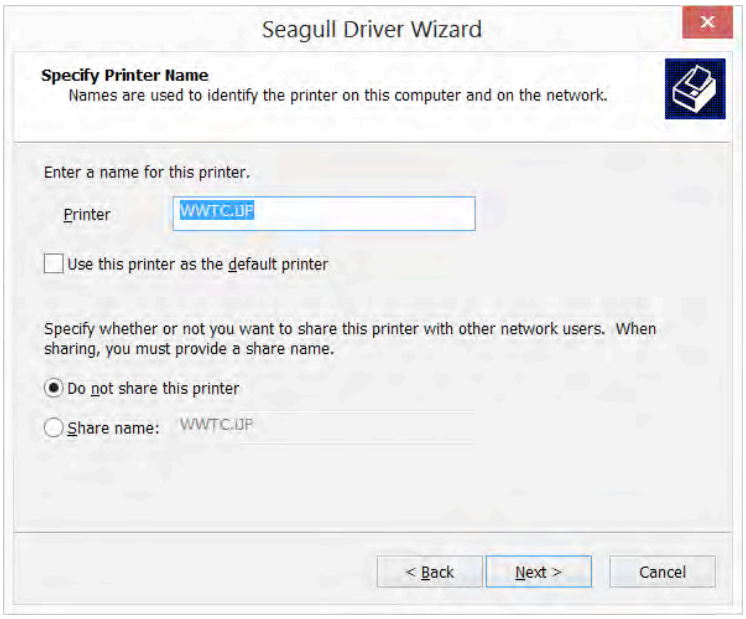

11) Click "Finish" to close the wizard. The printer may now be selected for use in the printer dialogue box of any windows application.

2.3 Loading Media

☑ The printer is equipped with an Adjustable Media Sensor and may require adjustment to match your media choice, refer to Section 5.4

2.3.1 Loading External Media when "Auto-Load" is enabled

1A) Plug cord into printer back
1B) Plug in power source end into block securely
1C) Plug into wall or power source

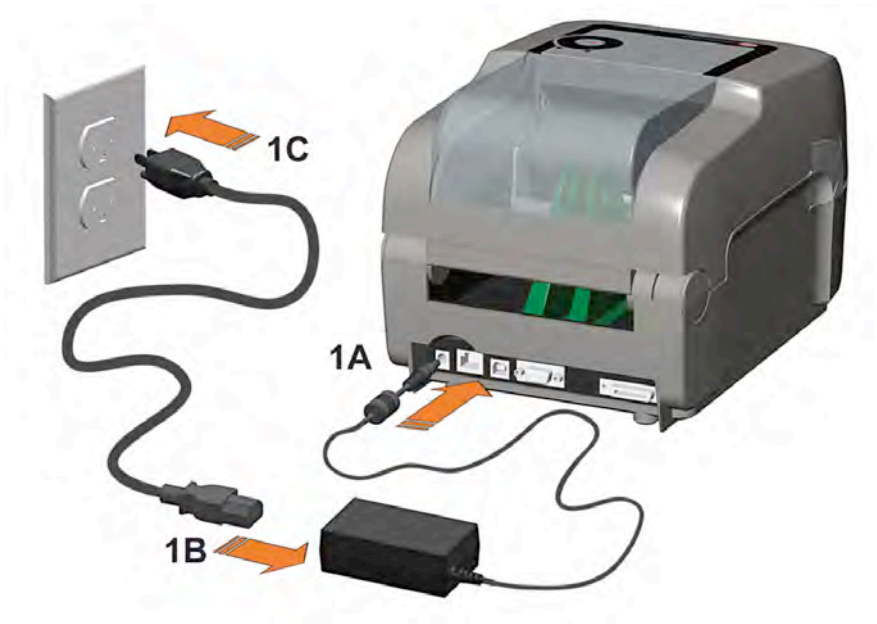

2) Connect to computer using Ethernet, USB or Serial Port.

3) **Adjust media guides.** Media guides can be adjusted to fit any thermal product from .75 inches to 4 inches in width. Do not insert ticket stock at this time.

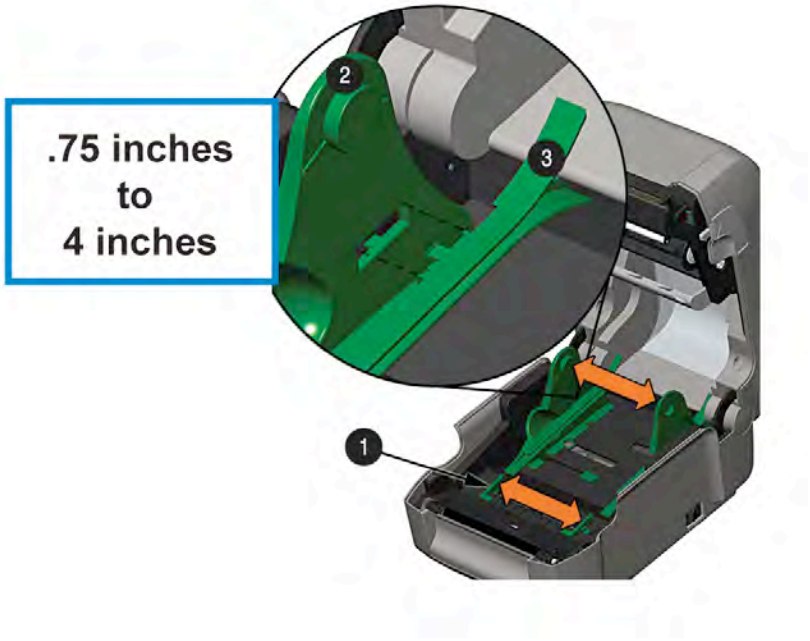

❶	Media Hangers
❷	Media Guides
❸	External Media Guide

4) **Close printer cover.** Do not load ticket stock at this time.

5) **Turn power switch on.** Note: If connected to host via USB, depending on which version of Windows you are using the "Hardware Found" wizard may launch. Close the wizard, we do not wish to load the driver in this way.

6) **Press the button once.** The right LED will now be blinking RED indicating that the printer is ready to be loaded with ticket stock.

7) **Load ticket stock.** Insert ticket stock through rear of printer between the ticket guides. Feed the ticket stock forward until resistance is felt. Continue to apply light forward pressure for three seconds.

8) Printer Auto-loads ticket.

8A) Printer will feed the ticket stock forward and then reverse.
8B) The light will turn solid green and printer will be ready.
8C) Your WWTC.iJP is set up for a Worldwide Ticketcraft 2” x 5.5” ticket.

☑ The printer is factory set to use gap media. If using another media type (for example, continuous media), printer setup must be reconfigured; see Section 3.4

9) Test Print.

9A)Using the menu keys, arrow up to “Test” and press the multi-function button.

9B) Arrow down to “Test” and press multi-function key. The printer will print a test ticket.

10) Install printer driver.

10A) Insert USB Drive into host computer. Windows Explorer will launch. From Windows Explorer, navigate to the USB Flash Drive labeled “FREE SPACE”. Open the file names “Accessories Menu” and click on “Install Driver”. The windows driver wizard will launch.

10B) Follow the instructions to load the Windows driver.

2.3.2 Loading - External Media when "Auto-Load" is disabled

Using Internal Media Chute Guides Accessory

Load media as follows:

1) Slide the Media Guides outward.

2) Slide the Media Hangers outward and install the two Media Chute Guides into the Media Hangers.

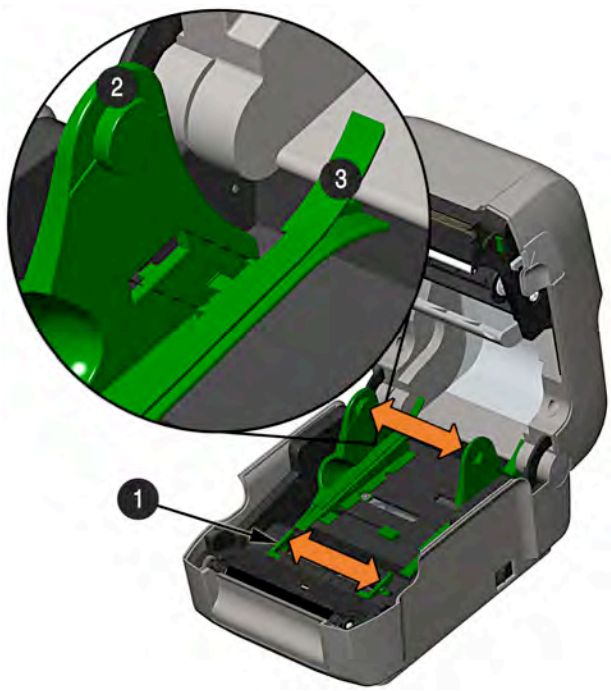

❶	Media Chute Guides
❷	Media Hangers
❸	External Media Guide

3) Position the Media Hangers to match the width of the media being used. Slide the Hanger Lock against the Media Hanger to hold this position.

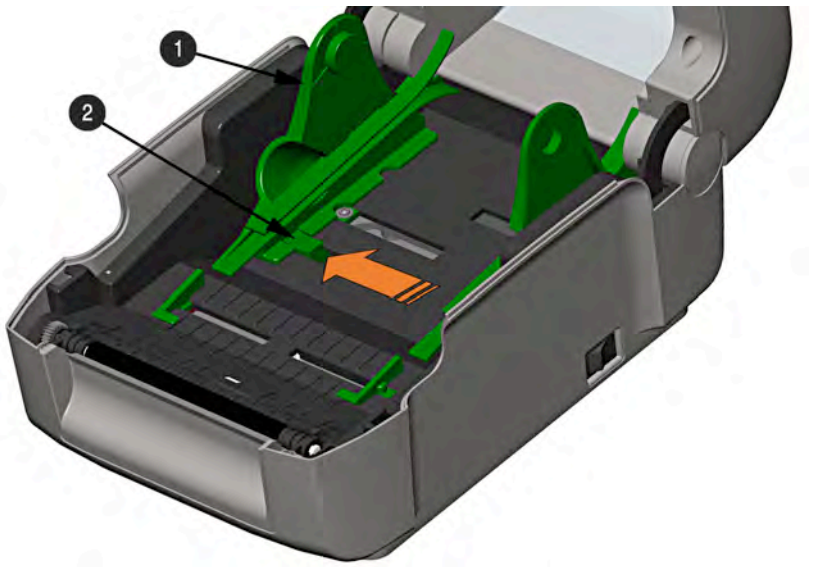

❶	Media Hangers
❷	Hanger Lock

4) Route the media through the External Media Slot in the rear of the printer. Pull out enough media to exit the front of the printer. Adjust the Media Guides so they are lightly touching the edge of the media.

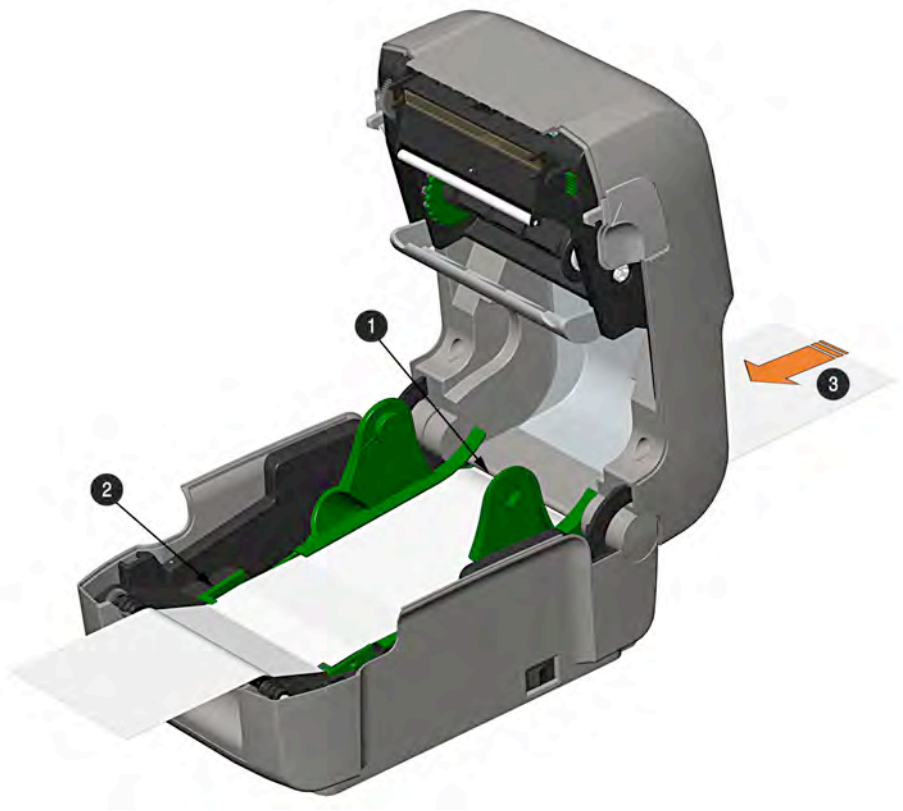

❶	External Media Slot
❷	Media Guides
❸	External Media Supply

5) If using Thermal Transfer media (ribbon) proceed to Section 2.4 Loading Ribbon. Otherwise close the printer's Cover and press downward until latched.

6) Press the  button to advance the media (if the Fault Light is lit, see Section 3.7.)

☑ The printer is factory set to use reflective media. If using another media type (for example, continuous media), printer setup must be reconfigured; see Section 4.4.

The printer is equipped with an Adjustable Media Sensor and may require adjustment to match your media choice, refer to Section 5.4.

2.3.3 Loading Roll Media

Load media as follows:

1) Pull forward on the Cover Latches and lift up on the cover. WWTC.iJP2 models have Key Lock option that must be unlocked before the cover can be opened.

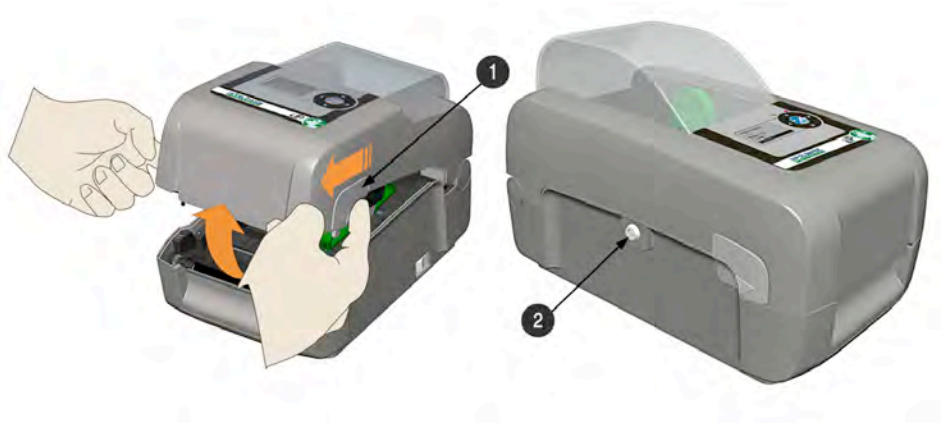

❶	Cover Latches
❷	Key Lock Option *(Pro+ models only)*

2) Slide the Media Guides outward.

WWTC.iJP2 model Media Guides are equipped with Adjustable Media Core Hangers, see Section 2.3.6.

3) Slide the Media Hangers outward and insert the Roll Media as shown. Allow the Media Hangers to retract and grasp the media roll.

❶	Media Hangers
❷	Media Guides
❸	Roll Media

4) Pull out enough media to exit the front of the printer. Adjust the Media Guides so they are lightly touching the edge of the media.

5) If using thermal transfer media (ribbon) proceed to Section 2.4 Loading Ribbon. Otherwise close the printer's Cover and press downward until latched.

WWTC.iJP2 models are equipped with a Cover Release Latch. Press outward on the latch to release cover.

❶	Cover
❷	Cover Release Latch *(WWTC.iJP2 models only)*

6) Press the button to advance the media (if the Fault Light is lit, see Section 3.5.)

The printer is factory set to use gap media. If using another media type (for example, continuous media), printer setup must be reconfigured; see Section 4.4.

2.3.4 Present Sensor Option

To utilize "Tear mode" with Peel and Present Option installed; move the Peeler Door to its open position.

1) Open the Peeler Door.

2) Load media as described in Section 2.3, (steps 1-3).

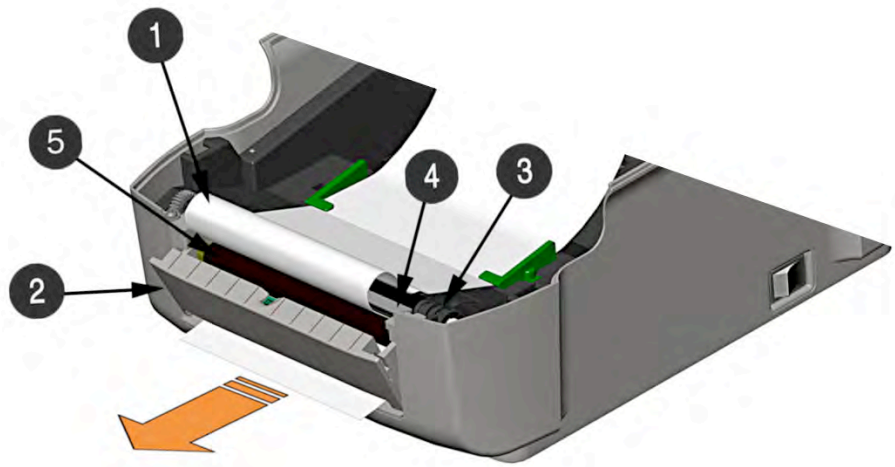

❶	Media Backing
❷	Present Sensor Door
❸	Platen Roller

3) The printer will now print each ticket and present it to the operator for removal. The indicator light will flash orange and the next ticket will not feed/print until the previous ticket is removed.

2.3.5 Loading Media with the Cutter Option

Load media for cutting (if the printer is equipped with the option) as follows:

1) Load media as described in Section 2.3, (steps 1-3).

2) Route the media through the opening in the Cutter.

❶	Cutter
❷	Media

3) Press the  button several times to advance the tickets (if the Fault Light is lit, see Section 3.7). The printer will now cut each ticket as it exits from the printer.

2.3.6 Adjustable Media Core Hangers *(WWTC.iJP2 models only)*

The Adjustable Media Core Hangers allow for support of media rolls with 3”, 1.5”, or 1” cores.

To adjust:

1) Pull outward in on the Core Hanger and slide the Core Hanger up or down to the desired setting. Be sure both core hangers are set to the same position.

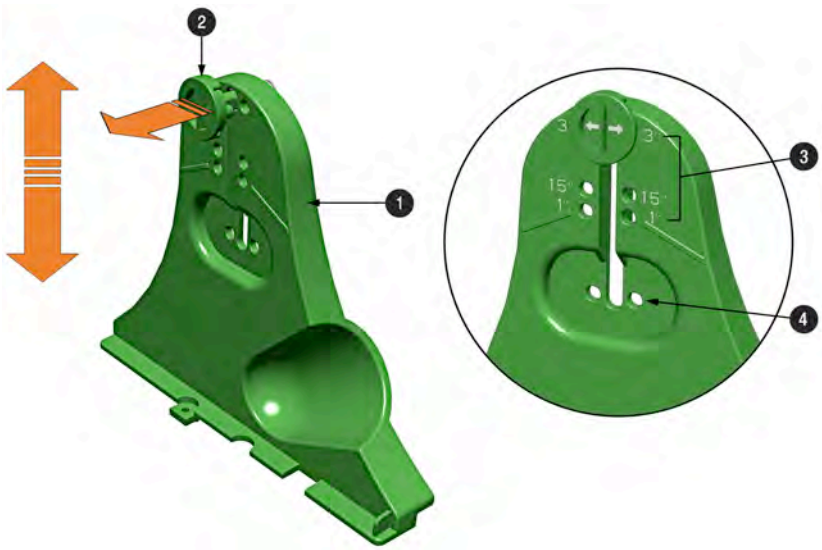

❶	Media Hanger
❷	Core Hanger
❸	3”, 1.5”, and 1” Core Positions
❹	Not in use Position *(for fanfold or external supply)*

3 Printer Operation

3.1 Introduction

The Front Panel consists of a graphic display, two indicator lights, four directional arrow buttons and one multi-function button, as detailed in the following sections.

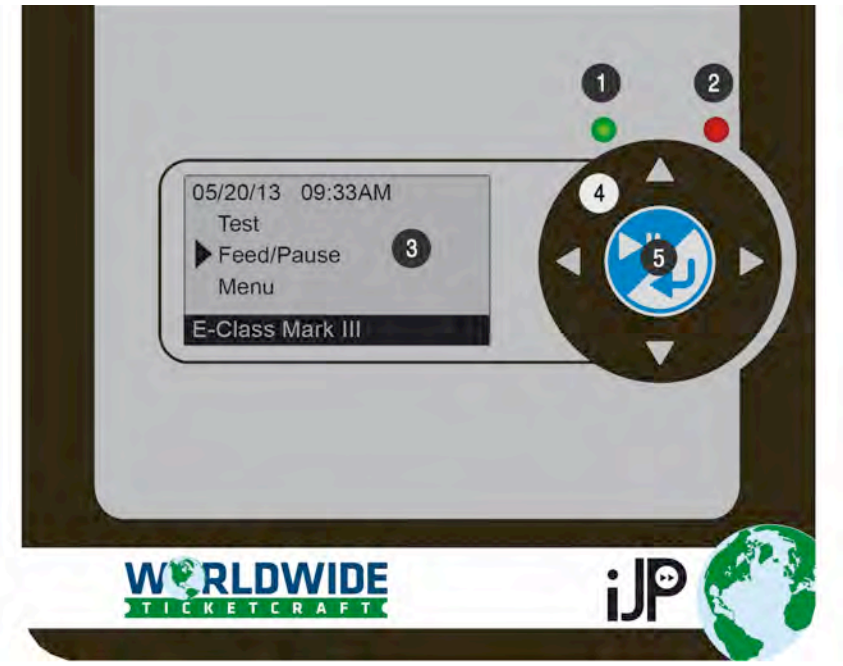

❶	Blue/White Status LED
❷	Red Error LED
❸	Graphic Display
❹	Directional Arrow Buttons
❺	Multi-function Button

3.2 LED Indicators

Two LED indicator lights provide a quick visual reference of printer operations and conditions, as defined below:

	LED 1		LED 2
Color	**Green**	**Orange**	**Red**
Solid	Ready to print	Paused or Present Sensor is blocked.	TOF sensing error. Next TOF not Found.
Flashing	Processing/busy	Paused/busy	Load Tickets, Out of stock\tickets or printer jam..
Off	No power		No Error

☑ Both indicators will be ON during power-up initialization and following a reset.

3.3 User Interface

The User Interface is divided in three sections, Feed/Pause, Test, and Menu. Button functions are dependent on the mode currently in use.

Use the Up and Down arrow buttons to scroll to the item and then press the center button to enter that menu mode.

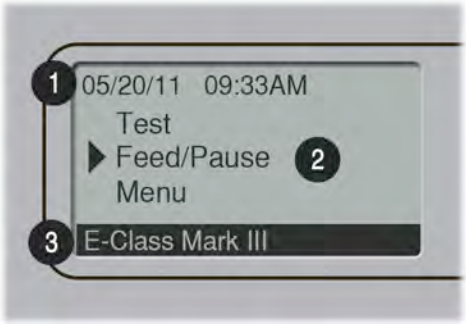

❶	Time/Date
❷	Printer Mode
❸	Programmable Marquee *(See Programmer's Manual for displaying a custom message)*

3.3.1 Feed/Pause Mode

	When Auto- Load is enabled and no ticket stock is loaded: Prepares printer for loading labels. At idle: Feeds the media to the next ticket. When printing: Pauses current print job; prompts user to resume or cancel
	Scrolls upward to the next menu item
	Scrolls downward to the next menu item
	N/A
	N/A

3.3.2 Test Mode

The Test Mode contains test and informational ticket selections:

- Print Quality Ticket
- Print Configuration
- Ribbon Test Ticket
- Test Ticket
- Validation Ticket
- Print Last Ticket
- Network Report

Internally generated, these tickets are printed at pre-selected media type, speed, and heat settings. Changes to these print settings can be made via the Menu System or through host commands. When printing, use full width media to capture the entire format; otherwise, adjust the printer and set the Ticket Width menu setting.

☑ (1) Press the CANCEL KEY to stop printing.

(2) A printing delay can be set; see Print Test Rate in the Diagnostics menu branch.

	Enters the Test mode menu/sub-menu items. Prints the chosen test ticket.
	Scrolls upward to the next menu item. Increments the Count value.
	Scrolls downward to the next menu item. Decrements the Count value.
	Exits the Test menu mode
	Displays the 'Count' screen.

3.3.3 Menu Mode

The menu mode is covered in detail in Chapter 4.

	Enters the Menu mode menu/sub-menu items. Enter/Accepts current prompt.
	Scrolls upward to the next menu item. Increments the current value.
	Scrolls downward to the next menu item. Decrements the current value.
	Exits to the previous menus level
	Enters the next menu/sub-menu item.

3.4 Printer Configuration Tools

The printer contains many user adjustable parameters. These parameters are configurable using a few methods. The table below lists the most popular ways of configuring the printer and the advantages of each. Choose the method that best addresses your application.

Method	Description	Pros	Cons	For More Info
Windows Driver	The Windows printer driver (located on the Accessories USB FLASH DRIVE).	Many applications require use of driver for printing from 3rd party applications. This can be an all in one solution for some users that do not require advanced setups.	Requires installation of a driver on a Windows based host.	See Section 3.6
Internal Web Pages*	Internal web pages are simple HTML pages that can be accessed with any web browser via the optional Ethernet port.	Easy to use. Printer can be configured from any host connected to the network regardless of physical location or host operating system. No additional software required.	Printer must be equipped with an Ethernet or Wi-FI option. Depending on the complexity of the network, initial connection may not be possible until network parameters are set via another method.	See Appendix B
DPL Programming Commands	DPL Programming Language commands can be built into custom ticket formats or sent individually to the printer.	DPL commands can be built directly into ticket formats which can configure the printer on the fly.	DPL programming knowledge needed.	See the *Programmer's Manual*

** Recommended methods*

Important Notes:

The Windows driver functions the same as any other Windows printer. While built-in help files provide information on all settings, there are some important setting parameters that should be observed for trouble free printing:

For a more detailed printer configuration method see "Ticket Setup" in Appendix D.

For a more detailed printer configuration method see section XYZ

Page Setup Tab: Stock

It is important that the Stock setting matches the size of the ticket you are using. If you cannot find a match for your ticket click New and enter the dimensions of your ticket.

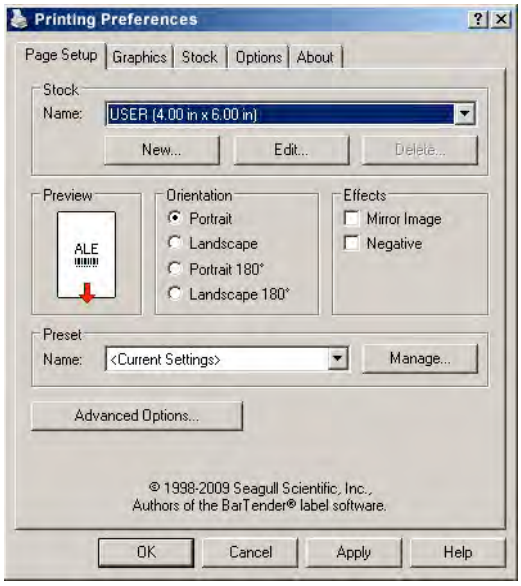

Options Tab: Print Speed &Printhead Temperature

These two settings will have the greatest effect on print quality. Some ticket stocks will require more heat and slower print speeds to generate a quality image.

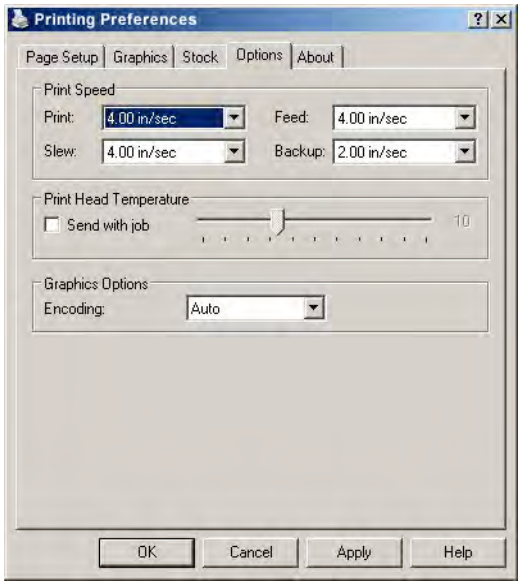

The Windows application software used to create the ticket format will likely have a "Page Setup" screen. This will also need to match the size of the ticket you are using.

3.5 Media Calibration

3.5.1 Quick Calibration

If using "Auto Load' setting you must perform the manual calibration described in Section 3.5.2.

Ensure the printer is properly loaded with media, proceed with calibration as follows:

- This calibration is not necessary when using continuous stock.
- Media containing large gaps may require a change in the Paper Out Distance before proceeding.

Calibrate the printer as follows:

Step	Action	Displayed Message	Comment
A	Turn ON the printer.		Wait briefly for initialization to complete.
B	Using the ▼ button scroll to MENU and press the button. Make sure MEDIA SETTINGS is highlighted and press the button. Then using the ▼button, scroll to SENSOR CALIBRATION.	(Printer Menu)	
C	Press the button to access SENSOR CALIBRATION. Make sure QUICK CALIBRATION is highlighted and press the button. Using the ▼button, scroll to YES and then press the button to proceed.	Quick Calibration No >Yes	Select NO to abort this procedure.
D	With the media installed and the cover closed, press and hold the button until at least 2 full tickets have been fed from the printer and then release.	Press/Hold Enter Key	

There are two possible outcomes:

CALIBRATION COMPLETE - will be displayed, and the media will be advanced to the next top of form if calibration was successful; or,

CALIBRATION FAILED will be displayed if calibration was not successful. In this case, check the hints listed below to help resolve the problem:

Calibration Hints:

If the initial attempt fails, perform the Manual Calibration routine, see Section 3.5.2.

3.5.2 Manual Calibration

The Manual Calibration can be performed using the front panel buttons via the printer's menu, see Section 3.5.2.

Manual Calibration is necessary when the "Auto Load" feature is enabled. Manual Calibration also provides dynamic readings, which can be helpful when using media with small position-critical notches or marks.

Calibrate the Media Sensor using the steps below:

Step	Action	Displayed Message	Comment
A	Turn ON the printer.		Wait briefly for initialization to complete.
B	Using the ▼ button scroll to MENU and press the button. Make sure MEDIA SETTINGS is highlighted and press the button. Then using the ▼button, scroll to SENSOR CALIBRATION.	(Printer Menu)	
C	Press the button to access SENSOR CALIBRATION. Make sure MANUAL CALIBRATION is highlighted and press the button. Using the ▼button, scroll to YES and then press the button to proceed.	Manual Calibration No >Yes	Select NO to abort this procedure.
D	With no media installed and the cover closed, press the button.	Remove Ticket Stock Press Enter Yyy	This sets the empty value, where "yyy" represents the current sensor reading.
E	Load the media. Be sure the Media Sensor is positioned correctly. With the media installed and the cover closed, press and hold the button until at least 2 full tickets have been fed from the printer and then release.	Please Reload Media Press/Hold Enter Key yyy	*Unless otherwise noted, do not move the Media Sensor after this step.*
F	Observe the calibration result.	Calibration Complete	Calibration was successful. ☑*If WARNING LOW BACKING is displayed, calibration was still successful.*
G	Press the ◀ repeatedly to exit the menu, select YES at the SAVE CHANGES prompt and then press the button.		The printer is now ready for use.

4 Menu System

4.1 Menu System Overview

The Menu System contains two modes, each with a differing level of access to secondary menus or functions:

- The User Menu accesses basic printer settings and functions
- The Advanced Menu accesses all operational settings, functions, and diagnostics

---

☑ Prompts may appear before menu access is granted and before changes are enacted; see Security for details.

4.2 The User Menu

The User Menu contains basic selections in these menus:

- Media Settings
- Print Control
- Printer Options
- System Settings

☑ (1) Some setting changes will only become effective (and saved) after selecting YES at the Save Changes prompt.

(2) Ticketing software may, in some cases, override the printer menu settings; see Advanced Menu for details.

4.3 The Advanced Menu

The Advanced Menu contains all setting, control, and functional selections in these menus:

- Media Settings
- Print Control
- Printer Options
- System Settings
- Communications
- Diagnostics

After selecting the Advanced Menu, it will be shown whenever the **MENU** branch is accessed. To enable the Advanced Menu, proceed as follows:

1. Press the button to scroll to MENU and then press the button.
2. Using the button, scroll to SYSTEM SETTINGS then press the button.
3. Be sure the cursor is next to MENU MODE then press the button.
4. Using the button, scroll to ADVANCED MENU then press the button. (Upon completion, OK will be displayed and the printer will exit the menu system.)

---

(1) Some setting changes will only become effective (and saved) after selecting YES at the Save Changes prompt.

(2) Ticketing software may, in some cases, override the printer menu settings; see Advanced Menu / Communications / Host Settings to avoid potential conflicts.

(3) To return to the User Menu, re-select it or restore the factory defaults.

4.4 Menu Details

Media Settings

The Media Settings menu contains ticket and ribbon sensing and sizing functions, as well as printhead cleaning selections:

- Media Type
- Media Index Type
- Auto Calibration*
- Ticket Length
- Maximum Ticket Length*
- Paper Empty Distance*
- Ticket Width
- Ribbon Low Options*
- Sensor Calibration*
- Printhead Cleaning*
- Auto Load

☑ Items denoted with an asterisk (*) are only accessible through the Advanced Menu.

The menu selections are defined as follows:

DISPLAYED ITEM	ITEM DESCRIPTION
MEDIA TYPE	Selects the method used to print tickets and should be set according to the type of media being used, where:
DIRECT THERMAL	Sets use for media that is heat reactive to produce an image.
THERMAL TRANSFER	Sets use for media that requires a ribbon to produce an image.
MEDIA INDEX TYPE	Selects the top-of-form (TOF) sensing method used to determine the leading edge of the ticket, where:
GAP	TOF will be recognized by sensing the gaps in the media. (Default Setting)
NOTCH	TOF will be recognized by sensing the notches on the edge of the media.
HOLE	TOF will be recognized by sensing the holes in the field of the media.
BLACK MARK	TOF will be recognized by sensing the reflective (black) marks on the underside of the media.
CONTINUOUS	No TOF sensing will be used; instead, LABEL LENGTH (in Media Settings) is used.
AUTO CALIBRATION	The printer will sense each ticket as it exits the printer and continually make sensor adjustments to ensure the best possible calibration.
ENABLE	(Default Setting)
DISABLE	Printer will use the stored calibration values
LABEL LENGTH	Determines the length of the ticket (0 - 99.99 inches) when the SENSOR TYPE is set to CONTINUOUS, where:
4.00	Is the default setting.
MAXIMUM LABEL LENGTH	Sets the distance (0 - 99.99 inches) that the printer will feed media to find TOF (when the Sensor Type is set to GAP or REFLECTIVE) before a TOF Fault is declared, where:
8.00	Is the default setting.

☑ Maximum Ticket Length should typically be 2.5 to 3 times the physical length of the ticket.

PAPER EMPTY DISTANCE	Sets the distance (0 - 99.99 inches) the printer will attempt to feed before an Out Of Stock Fault is declared, where:
0.25	Is the default setting.

☑ When using clear or translucent media, this setting should be longer than the actual ticket size.

LABEL WIDTH	Sets the maximum printable width. Objects extending beyond this setting will NOT print, where:
4.00	Is the default setting.

DISPLAYED ITEM	ITEM DESCRIPTION
RIBBON LOW OPTIONS	Defines the printer response when THERMAL TRANSFER mode is selected and the ribbon supply begins to diminish.
RIBBON LOW DIAMETER	Sets the ribbon supply threshold diameter (1.00 - 2.00 inches) that will trigger a Low Ribbon Warning prompt, where:
0.50	Is the default setting.
PAUSE ON RIBBON LOW	Allows the printer to enter a paused condition when Ribbon Low Diameter is met, where:
ENABLE	Pauses when a Ribbon Low Diameter condition is detected; the PAUSE Key must be pressed to proceed with the print job.
DISABLE	No action is required by the operator; printing can continue until a Ribbon Fault is declared. (Default Setting)
SENSOR CALIBRATION	Selects the media sensor calibration method, where:
QUICK CALIBRATION	Sets the values via internal printer calculations by feeding blank tickets through the printer.
MANUAL CALIBRATION	Manual calibration that scans media and backing and out of stock condition to calculate the proper calibration.
ADVANCED ENTRY	Sets the values via manual entry (typically for hard to calibrate ticket stocks), as described in the ADVANCED ENTRY CALIBRATION where:
PAPER SENSOR LEVEL	Establishes the threshold for the paper value (0 - 255), where 170 is the default setting.
REFL PAPER LEVEL	Establishes the threshold for the reflective value (0 - 255), where 170 is the default setting.
GAP SENSOR LEVEL	Establishes the threshold for the gap value (0 - 255), where 040 is the default setting.
MARK SENSOR LEVEL	Establishes the threshold for the mark value (0 - 255), where 040 is the default setting.
EMPTY SENSOR LEVEL	Establishes the threshold for the empty value (0 - 255), where 000 is the default setting.
TRAN SENSOR GAIN	Establishes the sensitivity of the transmissive sensor (0 - 31), where 15 is the default setting.
REFL SENSOR GAIN	Establishes the sensitivity of the reflective sensor (0 - 31), where 15 is the default setting.
PRINTHEAD CLEANING	Controls the automatic cleaning alert and function, where:
CLEAN HEAD SCHEDULE	Specifies the inch (or centimeter) count at which to clean the printhead, and if exceeded three times, declare a Head Cleaning Fault. (Note that the specified count [0 - 200 inches] will be multiplied by one thousand, and that zero [the default setting] will disable the function.)
CLEAN HEAD COUNTER	Indicates the number of inches (or centimeters) since a cleaning was last initiated.
RESET COUNTER	Resets the Clean Head Counter to zero to restart the Clean Head Schedule.
CLEAN HEAD NOW	Initiates the cleaning process and resets the Clean Head Counter.
AUTO LOAD	Allows printer to automatically load tickets that are fed into the rear of the printer
ENABLE	Enables Auto Load
DISABLE	Manually load tickets. Used when using rolled ticket stock or when Auto Load is not desired.

Print Control

The Print Control menu contains printing throughput, offset and custom setup functions:

- Heat
- Print Speed
- Feed Speed
- Reverse Speed*
- Slew Speed*
- Row Offset
- Column Offset
- Present Distance
- TOF Precedence*
- Custom Adjustments*

Items denoted with an asterisk (*) are only accessible through the Advanced Menu.

The menu selections are defined as follows:

DISPLAYED ITEM	ITEM DESCRIPTION
HEAT	Controls the burn time (0 - 30) of the printhead (and is equivalent to the Heat setting in many software ticketing programs), where:
10	Is the default setting.
PRINT SPEED	Controls the rate of ticket movement during printing, where:
x.x in/sec	Default setting is dependant on printer model.
FEED SPEED	Controls the rate of ticket movement between printing areas, where:
x.x in/sec	Default setting is dependant on printer model.
REVERSE SPEED	Controls the rate of ticket movement (2.0 - 5.0 inches per second) during backup positioning, where:
2.0 in/sec	Is the default setting.
SLEW SPEED	Controls the rate of ticket movement (2.0 - 16.0 inches per second) between printing areas when using the GPIO function, where:
x.x in/sec	Default setting is dependant on printer model.
ROW OFFSET	Shifts the vertical start of print position (0 - 99.99 inches) on the ticket, where:
0.00 in.	Is the default setting.
COLUMN OFFSET	Shifts the HORIZONTAL, left-justified start of print position to the right (0-99.99 inches), without shifting the LABEL WIDTH termination point to the right, where:
0.00 in.	Is the default setting.
PRESENT DISTANCE	Sets the ticket stop position (0 - 4.00 inches) past the start of print position upon output. When subsequent ticket formats are received, the printer will automatically back up the ticket to position it at the start of print position, where:
0.00 in.	Is the default setting.

When set to 0.01 in., NONE is assumed and a zero (0) positioning value will be used.

TOF PRECEDENCE	Allows an override of ticket format data when the form length is exceeded, where:
DISABLE	Prints tickets formats without TOF truncating.(Default Setting)
ENABLE	Ends the ticket at the next TOF, truncating any print data that extends past this mark.
CUSTOM ADJUSTMENTS	Changes the factory adjustment parameters to finely and independently compensate for slight mechanical differences sometimes evident when multiple printers share ticket formats. These settings are also available to make special ticket formatting adjustments, where:
DARKNESS	Controls the strobe time (1 - 64) to establish the nominal HEAT setting for printhead-specific thermal characteristics, where:
32	Is the default setting.
CONTRAST	Allows fine-tuning (1 - 64) of the gray adjustment for print quality, where:
32	Is the default setting.
ROW ADJUST	Shifts the vertical start of print position (in xxx dots) to fine-tune the ROW OFFSET setting, where:
+0 (-100 – 2030 DOTS)	If shifting Row Adjust in the negative direction, modify the PRESENT ADJUST setting (see below) by that same amount.
COLUMN ADJUST	Shifts both the horizontal start of print position and the LABEL WIDTH termination point to the right (in xxx dots) to fine-tune the COLUMN OFFSET setting, where:
+000 (-100 – 100 DOTS)	Is the setting.
PRESENT ADJUST	Adjusts the ticket stopping position (in xxx dots) to fine-tune the PRESENT DISTANCE setting, where:
+000 (-100 – 100 DOTS)	Is the setting.

Printer Options

The Printer Options menu contains file-handling, module, and optional equipment settings:

- Modules
- Present Sensor
- Cutter

The menu selections are defined as follows:

DISPLAYED ITEM	ITEM DESCRIPTION
MODULES	Controls memory handling functions, where:
DIRECTORY	Allows viewing and printing of the available space and file types (including plug-in files) present on a module. Only detected modules will be listed, and selecting ALL will display all results. (See the *Programmer's Manual* for memory allocation information.)
PRINT FILE	Prints selections from stored file types:

File Extension	Printed Result
DBM	A font sample.
DCM	The configuration commands contained in the file.
DIM	The image.
DLB	The stored ticket.
DLN	The name of the language.
DMS	The database contained in the file for RFID.
DPL	A ticket format, if detected.
DTT	A font sample.
PLU	The names of the files contained in the plug-in directory.
PRN	Is processed as a DPL file.
TXT	Is processed as a DPL file.

PROCESS FILE	Processes a selected file for use by the printer.
FORMAT MODULE	Selects from a list of modules available for formatting by the printer. Choosing FORMAT MODULE will erase existing data in the selected module
DELETE FILE	Selects from the list of available files for deleting.
COPY FILE	Selects from the list of available files for copying, prompting you for the destination module before execution.
UNPROTECT MODULE	Selects from the list of available modules to unprotect, and then prompting you regarding the outcome of the attempt.
PRESENT SENSOR	Controls the "on-demand" dispensing of tickets , where:
MODE	Sets the detection method and response of the printer:
ENABLED	Enables the Present Sensor (or Peel and Present mechanism) and sets the ticket stop location; if not detected, a fault will be generated.
DISABLED	Disables the option.
RETRACT DELAY	Programs a time delay for the retraction of the next ticket in the print process, where:
(1 - 255 x 10 mS) 070	Is the range, times 10 milliseconds; and Seventy (times ten) is the default setting.
CUTTER	Controls the Cutter operation, where:
MODE	Sets the detection method and response of the printer:
DISABLED	Disables the cutter.
AUTO	Is the default setting, where the presence of the cutter option is automatically sensed. If detected, the cutter is enabled; otherwise, it will be ignored.
ENABLED	Enables the cutter. If the cutter is not detected, a fault will be generated.

System Settings

The System Settings menu contains ticket formatting, operation, and control functions:

- Menu Mode
- Configuration File
- Internal Module*
- Default Module*
- Scaleable Font Cache*
- Single Byte Symbols*
- Double Byte Symbols*
- Time And Date
- Media Counters*
- Print Configuration*
- Configuration Level*
- Set Factory Defaults*
- Format Attributes*
- Ticket Rotation
- Imaging Mode*
- Pause Mode*
- Peel Mode*
- Security*
- Units Of Measure*
- Input Mode*
- User Ticket Mode*
- DPL Emulation*
- Column Emulation*
- Row Emulation*
- SOP Emulation*
- Back After Print*
- Font Emulation*
- Ticket Store*
- Menu Language
- Display Settings*
- Fault Handling*
- Buzzer*
- SCL Font Bold Factor*

☑ Items denoted with an asterisk (*) are only accessible through the Advanced Menu.

The menu selections are defined as follows:

DISPLAYED ITEM	ITEM DESCRIPTION
MENU MODE	Sets the menu access level, where:
USER MENU	Accesses limited basic menu items.
ADVANCED MENU	Accesses all menu items.
CONFIGURATION FILE	Controls the creation, storage, and recall of printer configuration files, where:
RESTORE AS CURRENT	Returns the printer to a previously saved configuration.
SAVE SETTING AS	Creates a file based on the current printer configuration, as described here.
DELETE FILE	Removes a selected configuration file from memory. (An active file cannot be deleted.)
FACTORY SETTING FILE	Provides a list of available configuration files used to restore the printer's configuration following a Level One Reset or when YES is selected in the SET FACTORY DEFAULTS menu. (NONE is the default file setting.)
INTERNAL MODULE	Sets the number of 1KB blocks (100 - 5120) allocated for the internal DRAM 'D' module, where:
1024	Is the Default Setting.
DEFAULT MODULE	Designates the memory module to be used for file storage when not specified, where:
D	Is the Default Setting (DRAM module).
G	Flash module.

☑ The available modules may vary depending upon printer model and options.

DISPLAYED ITEM	ITEM DESCRIPTION
SCALEABLE FONT CACHE	Configures the number of 1KB blocks (128 - 512) allocated for the scaleable font engine, where:
384 KBytes	Is the Default Setting.
SINGLE BYTE SYMBOLS	Selects the code page used to print single byte fonts, including:

ARABIC-8	ISO 15: ITALIAN	ISO 17: SPANISH
CYRILLIC	LEGAL	ISO 11: SWEDISH
ISO 60: DAN/NOR	HP4000 ZAPF DINGBAT	SYMBOL
DESKTOP	MATH-8	TURKISH-8
ITC ZAPF DINGBAT/100	MACINTOSH	PS TEXT
ITC ZAPF DINGBAT/200	PS-MATH	UTF-8
ITC ZAPF DINGBAT/300	PC-858 MULTILINGUAL	ISO 4: UK
PS ITC ZAPF DINGBAT	MICROSOFT PUBLISHING	ISO 6: ASCII
ISO 8859/1 LATIN 1	PC-8 CODE PAGE 437	VENTURA INTERNATIONAL
ISO 8859/2 LATIN 2	PC-8 D/N, CP 437N	VENTURA US
ISO 8859/5 LATIN 5	PC-852 LATIN 2	VENTURA MATH
ISO 8859/10 LATIN 6	PC-851 LATIN/GREEK	WINDOWS 3.1 LATIN 1
ISO 8859/7 LT/GK E7	PC-862 LATIN/ARABIC	WINDOWS LATIN/ARABIC
ISO 8859/15 LATIN 9	PI FONT	AGFA TIDBITS
ISO 8859/7 LT/GK EG	PC-850 MULTILINGUAL (Default Setting)	WINDOWS 3.1 LATIN 2
ISO 8859/8 LATIN/HBR	PC-864 LATIN/ARABIC	WINDOWS LATIN/GREEK
ISO 8859/8 LATIN/CYR	PC-8 TK, CP 437T	WINDOWS 3.1 LATIN 5
ISO 69: FRENCH	PC-1004	WINDOWS
GREEK-8	PC-775 BALTIC	WINDOWS 3.0 LATIN 1
PC-8 GREEK	PTXT3000	WINDOWS LATIN/CYRIC
ISO 21: GERMAN	NON-UGL, PI FONT	WINDOWS 3.0 LATIN 5
HEBREW-7	ROMAN-8	
HEBREW-8	ROMAN-9	

Reference the *Programmer's Manual* for code page symbol set details.

DOUBLE BYTE SYMBOLS	Selects the optional ILPC code page used to print double byte fonts, where:
JIS	Japanese Industry Standard
SHIFT JIS	Shift Japanese Industry Standard
EUC	Extended UNIX Code
UNICODE	Unicode (including Korean). (Default setting)
GB	Government Bureau Industry Standard; Chinese (PRC)
BIG 5	Taiwan encoded

Reference the *Programmer's Manual* for the code page symbol set details.

TIME AND DATE	Sets the printer's time and date.
MEDIA COUNTERS	Displays and controls various internal counters, where:
ABSOLUTE COUNTER	Shows the total number of inches printed and the date the counter was set (non-resettable).
RESETTABLE COUNTER	Shows the number of inches printed since the last reset (user-resettable).
RESET COUNTER	Returns the Resettable Counter to zero.
PRINT CONFIGURATION	Produces a Configuration Ticket using the printer's current database information.

(1) The information varies with the model, firmware version, and installed options.

(2) To capture all the data, use media that is at least 2 inches (51 mm) wide and set the TicketWidth (in Media Settings) according to the width of your tickets.

DISPLAYED ITEM	ITEM DESCRIPTION
CONFIGURATION LEVEL	Displays the hardware and software levels of the printer, where: ☑ This information is also provided on the Configuration Ticket.
PRINTER KEY	Identifies the unique key number of the printer, in the form:`vvvv-cwxx-yyyyyy-zzz`,where: `vvvv` – Represents the printer model number. `cwxx` – Represents the hardware/software feature level, where: `c` – Represents the printer class. `w` – Represents hardware feature level of the main board. `xx` – Represents the software feature level (10 = standard DPL, and 20 = Internal CG Times Font). Features are accepted up to this value, but increases beyond the range will require an authorization code. `yyyyyy` – Is the manufacturing date code. `zzz` – Is a unique time stamp.
APPLICATION VERSION	Displays the level, version number, and date of the application firmware.
BOOT LOADER	Displays the version level of the boot loaders.
UPGRADE PRINTER CODE	Upgrades the software feature level of the printer.
UNLOCK FEATURE	Unlocks additional optional features within the printer. (An authorization code is required.)
SET FACTORY DEFAULTS	Returns the printer settings to the factory-programmed values (except CUSTOM ADJUSTMENTS and calibrations); or, if selected, to the Factory Setting File, where selecting YES at the prompt causes the configuration to be restored.
FORMAT ATTRIBUTES	Defines the manner in which overlapping text and graphics appear when printed, where:
TRANSPARENT	Intersecting text, images, and bar codes will be printed.
XOR	Intersecting text, images, and bar codes will not be printed. (Default Setting)
OPAQUE	Intersecting text, images, and bar codes will be printed by obliterating those formatted first.
LABEL ROTATION	Allows the ticket format to be rotated 180 degrees before printing, where:
ENABLED	Flips the format.
DISABLED	Does not flip the format. (Default Setting)
IMAGING MODE	Determines the process used to format tickets, where:
MULTIPLE LABEL	Images multiple tickets as memory permits to achieve the fastest throughput. If time-stamping tickets, however, the indicated time will reflect the moment of imaging rather than the actual print time. (Default Setting)
SINGLE LABEL	Images the next ticket only after the previous ticket has been printed, providing the most accurate time-stamps but at a slower throughput rate.
PAUSE MODE	Allows for controlled interactive printing, where:
ENABLED	Requires you to press the PAUSE Key to print each ticket.
DISABLED	Tickets are printed without pausing. (Default Setting)
PEEL MODE	Allows the printer to wait until the Start of Print signal is received (via the optional GPIO Port) to feed a ticket, where:
ENABLED	Inhibits the feed function until the Start of Print signal is received.
DISABLED	Feeds the ticket regardless of the Start of Print signal. (Default Setting)
SECURITY	Allows all or part of the User Interface to be password-protected and for that password to be modified:
SELECT SECURITY	Allows password to be set for specific User Interface areas, where:
DISABLED	No password is required for menu access. (Default Setting)
SECURE MENU	Sets a password requirement for User and Advanced menu entry.
MENU AND TEST	Sets a password requirement for all menu entries.
ADVANCED MENU	Sets a password requirement for Advanced menu entry. (After enabling this selection, make it effective by returning the Menu Mode to the User setting; see above.)
MODIFY PASSWORD	Modifies the four-digit password required when security is enabled. For modification, the code must be reentered when prompted to confirm.

☑ To be activated, the password must initially be set to a value other than the default setting (0000).

DISPLAYED ITEM	ITEM DESCRIPTION
UNITS OF MEASURE	Sets the measurement standard used, where:
IMPERIAL	Uses inches. (Default Setting)
METRIC	Uses millimeters and centimeters.
INPUT MODE	Defines the type of processing that will occur when data is received, where:
DPL	Processes data for standard DPL printing.
LINE	Processes data for Line Mode (template) printing.
PL-Z	Alternative programming language processing will be used, with the exception of the following DPL specific-parameters: DPL Emulation; SOP Emulation; and Ticket Store.
PL-I	Processes data for PL-I printing.
PL-B	Processes data for PL-B printing.
AUTO	Identifies then activates the appropriate emulation parser for the data.
USER LABEL MODE	Sets the printer to power-up as default, where:
ENABLED	Functions in standalone mode for quick access to user defined formats. ☑ This mode will remain active until disabled.
✧DISABLED	Functions in normal mode, awaiting commands from a host.(Default Setting)
DPL EMULATION	Allows the printer to reproduce, for backward compatibility, ticket formats with the same characteristics as those produced by legacy models, where:
STANDARD	Standard DPL processing will be used for printing. (Default Setting)
ALLEGRO	Processes DPL data as an Allegro®, including row position calculations based on 194 dots per inch and the exceptions noted below.
PRODIGY PLUS	Processes DPL data as a Prodigy Plus®, including column calculations based on 200 dots per inch and the exceptions noted below.
PRODIGY	Processes DPL data as a Prodigy®, including column calculations based on 200 dots per inch and the exceptions noted below.

Exceptions:

Data Terminator processing – When printing I 2 of 5 bar codes D, J, and L, the first non-numeric character processed will terminate the bar code data field.

Bar Size exception – When printing I 2 of 5 bar code L, if the bar size specified is greater than P (25) it is automatically decreased to 10.

Human Readable Fonts fixed size – When printing EAN and UPC bar codes B, C, F, G, M, and N, a fixed font size is produced.

Line and box vertical sizing anomaly – When printing rotations 2 and 4, lines and boxes are affected by the vertical multiplication factor defined in the DPL Dxx command.

Column position defaults – Column positions greater than the printhead width are adjusted back to the printable area then printed.

Bar codes in rotation 3 - (upside down / right to left) default sizing – When row position in rotation 3 is less than bar code height, bar codes falling off the ticket's leading edge are pushed back onto the ticket.

<STX>L command – When no printable fields reside in the format, it results in no ticket movement.

DISPLAYED ITEM	ITEM DESCRIPTION
COLUMN EMULATION	Allows the column dots per inch to be adjusted (153 - 253 dots), so that numbers smaller than the printhead resolution reduce the printed output from right to left, where:
XXX Dots	Default setting is dependant on printer model.
ROW EMULATION	Allows the row dots per inch to be adjusted (103 - 303), so that numbers smaller than the printhead resolution enlarge the height of the printed output and numbers larger reduce it, where:
XXX Dots	Default setting is dependant on printer model.
SOP EMULATION	Allows ticket positioning commands to function with backward compatibility when printing ticket formats designed for legacy models, where:
DISABLED	Produces the natural start of print position. (Default Setting)
110 (PRODPLUS)	Emulates the Prodigy Plus® start of print position.
220 (ALLEGRO)	Emulates the Allegro® start of print position.
250 (PRODIGY)	Emulates the Prodigy™ start of print position.
BACK AFTER PRINT	Determines media movement when a cutter, present sensor, peel and present, or GPIO is enabled, where:
MODE	Repositions media, where:
DISABLED	Movement occurs only when the next ticket is ready to print, minimizing edge curling. (Default Setting)
ENABLED	Movement occurs according to BACKUP DELAY timing after a cut, cleared sensor, or SOP to allow fastest throughput.
BACKUP DELAY (1/50s)	Instructs the printer to retract a presented ticket after a specified time elapses (0 – 255, in one-fiftieth of a second increments), where:
000	Retraction occurs when the next ticket is received and processed. (Default Setting)
FONT EMULATION	Allows font substitution for all internal fonts where:
STANDARD FONTS	Prints using a standard (internal) font. (Default Setting)
CG TIMES	Prints using the CG Times font.
USER ID S50	Prints using a downloaded font.
LABEL STORE	Determines the command recall level used when retrieving stored ticket formats, where:
STATE & FIELDS	Recalls the printer state (i.e., heat, speed settings, etc.) and the ticket-formatting commands for the stored ticket. (Default Setting)
FIELDS ONLY	Recalls the ticket-formatting commands for the stored ticket.
MENU LANGUAGE	Selects the menu and configuration ticket language. Only languages that are resident will be displayed (see Appendix D), where:
ENGLISH	Enables English (Default Setting)
DISPLAY SETTINGS	Determines the appearance of the items in the display, where:
GRAPHIC DISPLAY MODE	Determines the magnification of the displayed items, where:
STANDARD	Is the normal setting.
ENHANCED	Is the enlarged setting.
DISPLAY UNITS	Determines the displayed type of distance information, where:
STANDARD	Displays the information according to the UNITS OF MEASURE setting (see above).
IMPERIAL	Displays the information in inches.
METRIC	Displays the information in millimeters and centimeters.
DISPLAY BACKLIGHT	Controls the mode and "ON" time of the display's backlight
BACKLIGHT MODE	Sets the mode in which the backlight is activated. Choices are Always On, Always Off, or Auto.
AUTO ON TIME	Set the amount of time the backlight will remain on. BACKLIGHT MODE (see above) must be set to auto.
DISPLAY CONTRAST	Adjusts the displays contrast (0-100), where:
50	Is the default setting
FAULT HANDLING	Determines the intervention required and the disposition of the ticket in process when a fault occurs, where:
LEVEL	Selects the user action and the reprint status upon declaration of a fault, where:
NO REPRINT	Printing stops and a fault message is displayed. Following correction of the problem, the FEED Key must be pressed to clear the fault, but the ticket in process is not reprinted.
STANDARD	Printing stops and a fault message is displayed. Following correction of the problem, the FEED Key must be pressed to clear the fault then the ticket in process is reprinted. (Default Setting.)
BUZZER	Sets a scalable font boldfacing amount, where:
ENABLED	Enables the printers buzzer. (Default Setting)
DISABLED	Disables the printers buzzer.
SCL FONT BOLD FACTOR	Sets a scalable font boldfacing amount, where:
08 (1 – 36)	Is the setting, based on an incrementing scale, where eight (08) is nominal.

Communications

The Communications menu contains interface and host control functions:

- Serial Port A*
- Parallel Port A*
- USB Port*
- Network/Bluetooth*
- Host Settings*

☑ Items denoted with an asterisk (*) are only accessible through the Advanced Menu.

The menu selections are defined as follows:

DISPLAYED ITEM	ITEM DESCRIPTION
SERIAL PORT A	Controls the RS-232 communications settings for Serial Port A, where:
BAUD RATE	Sets the serial communication rate, where:
(1200 – 115KBPS) 9600 BPS	Is the range, in Bits Per Second; and, is the Default Setting.
PROTOCOL	Sets the data flow control (handshaking) method, where:
BOTH	XON/XOFF and CTS/DTR are used. (Default Setting)
SOFTWARE	XON/XOFF is used.
HARDWARE	CTS/DTR is used.
NONE	Flow control is not used.
PARITY	Sets word parity, where:
NONE	Parity is not used. (Default Setting)
ODD	Odd parity is used.
EVEN	Even parity is used.
DATA BITS	Sets word length, where:
(7 - 8) 8	A seven or eight bit word is selectable; and, is the Default Setting.
STOP BITS	Sets the number of stop bits, where:
(1 - 2) 1	One stop or two stop bits are selectable; and, is the Default Setting.
PARALLEL PORT A	Controls the communication setting for the parallel port, where:
PORT DIRECTION	Determines if data is returned from the printer, where:
UNI-DIRECTIONAL	No data is returned; communication is one-way.
BI-DIRECTIONAL	Data is returned in compliance with IEEE 1284 back-channel operation. (Default Setting) ☑ An IEEE 1284 bidirectional cable is required.
USB PORT	Controls the communication setting for the USB port
USB DEVICE CLASS	Defines the USB port type
PRINTER	Sets the printer for use as a typical Windows printer
CDC	Sets the printer for use with handled PC's and similar devices
COMPOSITE	Combines both Printer and CDC classes. (Default Setting)

DISPLAYED ITEM	ITEM DESCRIPTION
NETWORK/BLUETOOTH	Controls the communications settings for the network and Bluetooth interfaces, where:
ACTIVE INTERFACE	Selects the network interface currently in use by the printer, where:
NONE	Disables all interfaces
WIRED ETHERNET	Selects the Wired Ethernet interface
WIRELESS ETHERNET	Selects the Wireless Ethernet interface (if installed)
BLUETOOTH	Selects the Bluetooth interface (if installed)
WIRED ETHERNET	Controls the communications settings for the wired Ethernet network interface
IP DISCOVERY	Sets the address discovery method, where:
USE STATIC ADDRESSES	The stored static IP, Subnet Mask, and / or Gateway Address will be used.
USE DHCP	The card broadcasts over the network using DHCP protocol to receive addresses from the responsible server at startup. Manual modifications to IP Address, Subnet Mask, or Gateway Address are not allowed; and, if no server is found, the specified static value will be used. (Default Setting) A server assigned IP address takes precedence over any static IP address stored in the interface.
USE BOOTP	The card broadcasts over the network using BOOTP protocol to receive addresses from the responsible server at startup. Manual modifications to IP Address, Subnet Mask, or Gateway Address are not allowed; and, if no server is found, the specified static value will be used. (Default Setting) A server assigned IP address takes precedence over any static IP address stored in the interface.
STATIC IP ADDRESS	Specifies the static IP Address of the interface in the standard octet format.
STATIC SUBNET MASK	Specifies the static Subnet assigned to the interface, for example:255.255.255.000.
STATIC GATEWAY	Specifies the Gateway Address the interface will use, for example:192.168.10.1
DUPLEX CAPABILITY	Specifies the transmission and speed of the wired Ethernet connection: • Auto-Negotiate (default); • 10 BaseT Half Duplex • 10 BaseT Full Duplex • 100 BaseT Half Duplex • 100 BaseT Full Duplex
PRIMARY WINS SERVER	The IP address of the primary WINS Server.
SECONDARY WINS SERVER	The IP address of the secondary WINS Server.
PRIMARY DNS SERVER	The IP address of the primary DNS Server.
SECONDARY DNS SERVER	The IP address of the secondary DNS Server.
SNMP TRAP ADDRESS	Is the address in standard octet format where SNMP traps will be sent when SNMP service is installed on your receiver. When zeroed, no traps are sent.
SNMP SERVER ADDRESS	Is the server address in standard octet format for SNMP services.
NETBIOS ENABLE	Enables or disables the NET BIOS SERVICES
NO	(Default Setting)
YES	
TCP PRINT PORT	Selects the Port to use for all TCP network communications; Default is 9100
INACTIVITY TIME	Set the amount of time (*in seconds*) in which the current port will remain open when no activity is present.
LPD PRINT PORT	Selects the Port to use for all LPD network communications; Default is 515

DISPLAYED ITEM	ITEM DESCRIPTION
WIRELESS ETHERNET	Controls the communications settings for the wireless Ethernet network interface, where:
IP DISCOVERY	Sets the address discovery method, where:
USE STATIC ADDRESSES	The stored static IP, Subnet Mask, and / or Gateway Address will be used.
USE DHCP	The card broadcasts over the network using DHCP protocol to receive addresses from the responsible server at startup. Manual modifications to IP Address, Subnet Mask, or Gateway Address are not allowed; and, if no server is found, the specified static value will be used. (Default Setting) ☑ A server assigned IP address takes precedence over any static IP address stored in the interface.
USE BOOTP	The card broadcasts over the network using BOOTP protocol to receive addresses from the responsible server at startup. Manual modifications to IP Address, Subnet Mask, or Gateway Address are not allowed; and, if no server is found, the specified static value will be used. (Default Setting) ☑ A server assigned IP address takes precedence over any static IP address stored in the interface.
STATIC IP ADDRESS	Specifies the static IP Address of the interface in the standard octet format.
STATIC SUBNET MASK	Specifies the static Subnet assigned to the interface, for example:255.255.255.000.
STATIC GATEWAY	Specifies the Gateway Address the interface will use, for example:192.168.10.1
BLUETOOTH	Controls the communications settings for the Bluetooth network interface, where:
DISCOVERABLE	Yes/No; Determines whether other Bluetooth devices in range can detect the printer.
CONNECTABLE	Yes/No; Determines whether other Bluetooth devices in range can connect to the printer.
BONDABLE	Yes/No; Determines whether other Bluetooth devices in range can create a "bondable" connection with the printer
AUTHENTICATION REQUIRED	Yes/No; Determines whether passkey is required to the printer.
ENCRYPTION	Yes/No; Determines whether encryption is used during data transfer to the printer.
INACTIVE DISCONNECT TIME	(0-65535 in seconds); Default: 60 Set the amount of time (*in seconds*) in which the current connection will remain open when no activity is present.
POWER DOWN TIME	(0-65535 in seconds); Default: 60 Set the amount of time (*in seconds*) in which the Bluetooth module will remain on when no activity is present.
GENERAL NETWORK	Controls general communication parameters, where:
SNMP ENABLE	Sets SNMP
NO	(Default Setting)
YES	
TELNET ENABLE	Enable/Disable Telnet protocol
NO	(Default Setting)
YES	
FTP SERVER ENABLE	Enable/Disable FTP protocol
NO	(Default Setting)
YES	
HTTP SERVER ENABLE	Enable/Disable FTP protocol
NO	
YES	(Default Setting)
LPD PRINT ENABLE	Enable/Disable LPD protocol
NO	
YES	(Default Setting)
TCP PRINT ENABLE	Enable/Disable TCP protocol
NO	
YES	(Default Setting)
NETCENTER ENABLE	Enable/Disable Netcenter compatibility
NO	(Default Setting)
YES	
GRATUITOUS ARP	Sets time interval for ARP transmission packets, where: (0-100 minutes); Default is 0
NETWORK REPORT	Print or view on screen the printers network information.

DISPLAYED ITEM	ITEM DESCRIPTION
HOST SETTINGS	Controls the communications with a host device, where: ☑ The "ignore host" settings for ESC SEQUENCES, HEAT, SPEED, TOF SENSING, SYMBOL SET, CNTRL-CODES, STX-V SW SETTINGS, and MAX LENGTH will be unaffected when PL-Z Mode is selected (see Input Mode for details).
HOST TIMEOUT	Sets the number of seconds (1 - 60) that an established communications port must be idle before data can be received through an alternate port, where: ☑ If the time-out period is exceeded before all data is received, the data will be ignored.
10	Is the Default Setting.
CONTROL CODES	Allows changes to the prefix of the software commands interpreted by the printer, where:
STANDARD CODES	Use these characters: Hex 01 = SOH command; Hex 02 = STX command; count-by = ^; Hex 1B = ESC; Hex 0x0D = Carriage Return. (Default Setting)
ALTERNATE CODES	Use these characters: Hex 5E = SOH command; Hex 7E = STX command; count-by = @; Hex 1B = ESC; Hex 0x0D = Carriage Return.
ALTERNATE CODES 2	Use these characters: Hex 5E = SOH command; Hex 7E = STX command; count-by = @; Hex 1B = ESC; Hex 0x7C = Carriage Return.
CUSTOM CODES	Each DPL command (SOH, STX, CR, and count-by) may be selected by entering the desired Hex code.
FEEDBACK CHARACTERS	Allows the printer to return a Hex 1E (RS) after each ticket successfully prints, and a Hex 1F (US) after each ticket batch successfully prints, where:
ENABLED	Sends feedback characters to the host.
DISABLED	Does not send feedback characters to the host. (Default Setting)
ESC SEQUENCES	Allows data containing invalid ESC control code sequences to be processed, where:
ENABLED	Processes commands normally. (Default Setting)
DISABLED	Ignores ESC sequences are during processing (since some systems send a "banner" to the printer). Bitmapped font downloads are disabled in this mode.
HEAT COMMAND	Determines the way the DPL Heat command is handled, where:
ENABLED	Processes commands normally. (Default Setting)
DISABLED	Ignores DPL Heat commands; instead, the heat value is controlled via the menu setting.
SPEED COMMANDS	Determines the way DPL Print, Feed, Slew, and Reverse commands are handled, where:
ENABLED	Processes commands normally. (Default Setting)
DISABLED	Ignores DPL speed commands; instead, the speeds are controlled via the menu setting.
TOF SENSING COMMANDS	Determines the way in which DPL Gap, Continuous, and Reflective commands are handled, where:
ENABLED	Processes commands normally. (Default Setting)
DISABLED	Ignores DPL TOF commands; instead, TOF is controlled via the menu setting.
SYMBOL SET COMMAND	Determines the way in which DPL Single and Double Symbol Set commands are handled, where:
ENABLED	Processes commands normally. (Default Setting)
DISABLED	Ignores DPL Symbol Set commands; instead, the Symbol Set selection is controlled via the menu setting.
CNTRL-CODES (DATA)	Determines the way in which DPL SOH, STX, CR, ESC, and ^ codes are handled, where:
ENABLED	Processes commands normally. (Default Setting)
DISABLED	Ignores DPL Control Codes; instead, the control code functions are established via the menu setting.
STX-V SW SETTINGS	Determines the way in which the DPL <STX>V command is handled, where:
ENABLED	Processes commands normally. (Default Setting)
DISABLED	Ignores the option-enable command; instead, the option selections are controlled via menu settings.
MAX LENGTH COMMAND	Determines the way in which the DPL <STX>M command is handled, where:
ENABLED	Processes commands normally. (Default Setting)
DISABLED	Ignores the maximum ticket length command; instead, Maximum Ticket Length is controlled via the menu setting.
PROCESS SOH (DATA)	Determines the way the printer responds to an Immediate Command (e.g., Get Status, Module Storage, etc.), where:
ENABLED	Operations are interrupted upon receipt to process the command.
DISABLED	Processes commands normally. (Default Setting)

Diagnostics

The Diagnostics menu contains testing functions and printhead reporting selections:

- Hex Dump Mode*
- Options Testing*
- Print Test Rate (min)*
- Sensor Readings*
- Ribbon Sensor Limits*
- Flash Module Report*

☑ Items denoted with an asterisk (*) are only accessible through the Advanced Menu.

The menu selections are defined as follows:

DISPLAYED ITEM	ITEM DESCRIPTION
HEX DUMP MODE	Determines how the printer handles the data received from a host, where:
ENABLE	The printer outputs the raw ASCII data it receives without interpretation; no processing occurs.
DISABLE	Processes data normally. (Default Setting)
FILE CAPTURE	Saves the incoming data to Module H (USB thumbdrive) if present; otherwise, the file is stored on Module G. The file name, in the form `[dmx_xxx_yyy.dpl]`, where the count is automatically incremented for every capture and a unique printer time stamp (xxx), is assigned.
OPTIONS TESTING	Performs printer option diagnostics or monitors and outputs test results, where:
TEST PRESENT SENSOR	Performs a functional test of the Present Sensor by indicating LABEL PRESENTED (when a ticket blocks the sensor) and LABEL NOT PRESENTED (when no ticket blocks the sensor). (Note that this test can also be used to check the sensor function of the Peel & Present option.)
TEST CUTTER	Performs a functional test of the Cutter, where:
PERFORM TEST 001 TIMES	Cycles the cutter blade a selected number of times (0 - 999), with PASS / FAIL results given for each cycling attempt.
PRINT TEST RATE (MIN)	Sets a ticket-to-ticket delay interval (0 - 120 minutes) when Test ticket batch printing, where:
000	Is the Default Setting.
SENSOR READINGS	Displays the values (0 – 255) from the printer sensors, where: THR 103 TRAN 091 RIBM 009 24V 171 PS 003 HD 255 RANK 050 THR = Printhead thermistor sensor; TRAN = Gap media sensor (REFL when set to reflective); RIBM = Ribbon sensor; 24V = 24 volt power supply sensor; PS = Present sensor; HD = Printhead position sensor; and, RANK = Printhead ranking resistor.
RIBBON SENSOR LIMITS	Displays the values from the ribbon sensor readings (see example below) for printers equipped with the thermal transfer option, where: RIBBON ADC LOW 111 RIBBON ADC HIGH 249
FLASH MODULE REPORT	Displays the module report data, where:
VIEW	Displays the data.
PRINT	Prints a reference ticket: **FLASH MODULE REPORT** SUN 12:44PM 23MAY2011 Module G Mount Fail: 0 Module G Reformatted: 0

5 Maintenance& Adjustments

5.1 Introduction

This section details the cleaning, adjusting, and troubleshooting tips for the printer. The following table outlines the recommended maintenance schedule for the various printer parts.

Area	Method	Interval
Printhead	Turn OFF the printer before cleaning the printhead. Use solvent* applied with a cotton swab to clean the printhead from end to end.	After every roll of media.
Platen Roller	Turn OFF the printer. Rotate the platen roller and clean it thoroughly with solvent* applied with a cotton swab.	After every roll of media.
Peel-Off Roller	Rotate the peel-off roller and clean it thoroughly with solvent* applied with a cotton swab.	After every roll of media.
Media Path	Solvent*	After every roll of media.
Peel/Tear Bar	Solvent*	As needed
Media Sensor	Blown air or brush	Monthly
Exterior	Mild detergent or desktop cleaner.	As needed
Interior	Brush or vacuum cleaner	As needed.

** A solvent containing isopropyl alcohol is recommended for use.*

Warning

Isopropyl alcohol is a flammable solvent; always take the proper precautions when in use.

5.2 Cleaning the Printhead

Warning

Never use a sharp, hard, or abrasive object on the printhead.

If print quality declines (symptoms can include unreadable bar codes or streaks through text and graphics), the typical cause is debris buildup on the printhead which, left unattended, can lead to premature dot failure. Depending upon the supplies and printing parameters used, different cleaning methods are recommended.

Streaks can indicate a dirty or a faulty printhead.

Proper cleaning is critical. To maintain peak performance of the printer, Worldwide Ticketcraft offers a complete line of cleaning products including pens, cards, films and swabs.

Cotton Swab Procedure

If printing with direct thermal media or thermal transfer media with wax ribbon, clean the printhead as follows:

1) Turn OFF the power switch and unplug the printer. Open the printer. **Wait briefly for the printhead to cool.**

2) Remove any installed media and ribbon. Using a Cotton Swab moistened (not soaked) with isopropyl alcohol, thoroughly clean the Printhead.

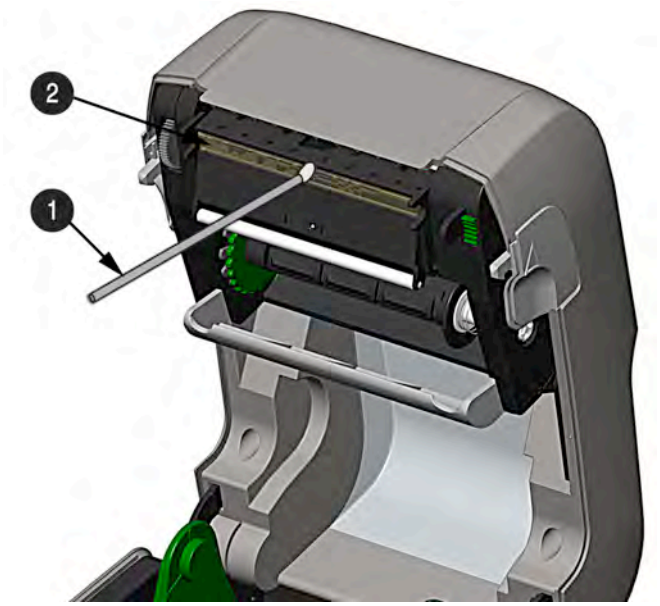

❶	Cotton Swab with Solvent
❷	Printhead

Cleaning Card Procedure

If printing with direct thermal media, thermal transfer media with wax/resin ribbon combinations, or if the Cotton Swab technique was not successful, clean the printhead as follows:

1) Open the printer. **Wait briefly for the Printhead to cool.**

2) Remove media and ribbon then place a Cleaning Card under the Printhead(part number 70-2013-01).

3) Close the cover then press the button to initiate cleaning.

4) After the cleaning card has been run through the printer, reinstall media (and ribbon, if needed). Plug in and turn ON the printer. Run a few sample tickets and examine them. If streaking is still present, use the Cleaning Film Procedure, below; otherwise, this completes cleaning.

Cleaning Film Procedure

If printing with thermal transfer media and resin ribbon, when printing with a Heat Value of 22 or higher, or when other methods prove unsuccessful, clean the printhead as follows:

1) Open the printer. **Wait briefly for the Printhead to cool..**

2) Remove media and ribbon then place a sheet of Cleaning Film under the Printhead(part number 70-2087-01).

3) Close the cover then press button to initiate cleaning.

4) After the cleaning film has been run through the printer, turn OFF the Power Switch and unplug the printer. Open the cover and **wait briefly for the Printhead to cool.** Using a cotton swab moistened (not soaked) with isopropyl alcohol, clean the Printhead then allow it to dry.

5) Reinstall media (and ribbon, if needed). Plug in and turn ON the printer. Run a few sample tickets and examine them. If streaking is still present, the Printhead may need to be replaced; see Section 5.5

5.3 Adjustable Media Sensor

The optional Adjustable Media Sensor (AMS) allows the printer to accept a wider variety of media configurations. The table below defines general AMS positions for various media and Top of Form (TOF) types.

AMS Positioning		
Media Type	**Sensor Location**	**TOF Sensing Method**
Black Bar	Center of the Black Mark	Reflective
Continuous	Any location in the media path with both sensors aligned.	Continuous (Only detects out of media)
Die-Cut	Any location within the media path where the gap between the tickets crosses the sensors. (top and bottom sensors must be aligned)	Separate Die Cut and Notched. Use this for the Notched or Hole Media
Notched/Hole	Center of the Notch or Hole	Gap (primary) Reflective (secondary)

Position the AMS as follows:

1) On the Bottom AMS Sensor, identify the proper Indicator for use with your media.

❶	Gap or Notch Indicator
❷	Reflective (Mark) Indicator

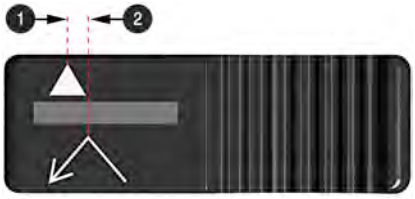

2) Slide the Bottom AMS sensor so the Indicator is in line with the center of the notch, gap, or reflective (mark) of the installed media.

3) Slide the Top AMS Sensor over to the <u>same</u> setting as the Bottom AMS Sensor, (this is not necessary if using reflective media).

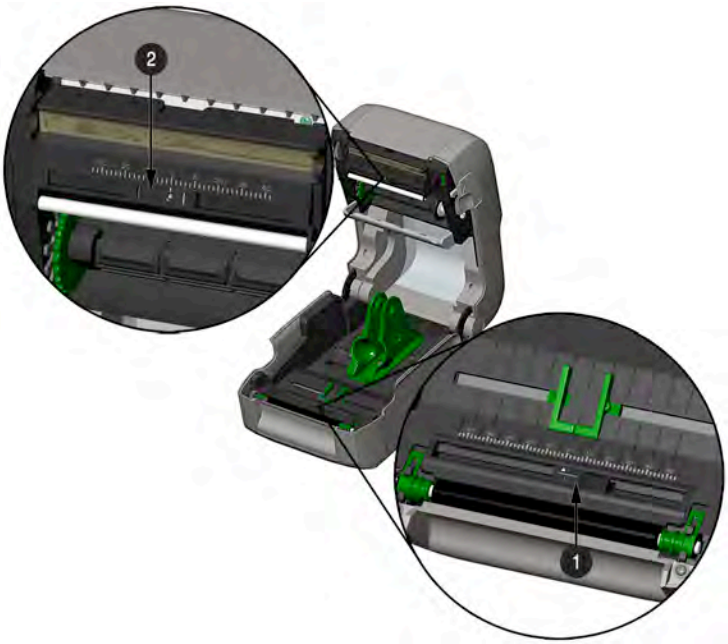

❶	Bottom AMS Sensor
❷	Top AMSSensor

4) Load media, see Section 2.3.

5.4 Printhead Replacement

If the Printhead becomes damaged or worn, replace it as follows:

☑ Always follow proper Electro Static Discharge procedures when replacing the printhead.

1) Turn OFF the printer and remove the ribbon if installed.

2) Lower the Ribbon Handler Assembly.

3) Press outward on the two Printhead Carrier Tabs and rotate the Printhead Carrier down.

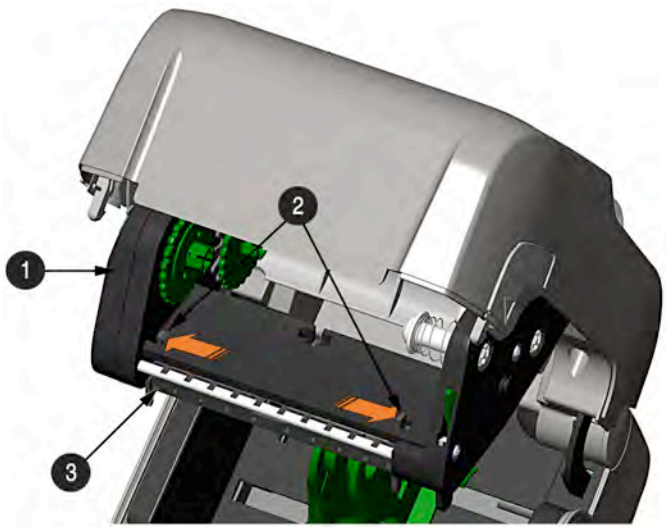

❶	Ribbon Handler
❷	Printhead Assembly Tabs
❸	Printhead Carrier

4) Press inward on the two Printhead Shield Tabs and rotate the Printhead Shield down.

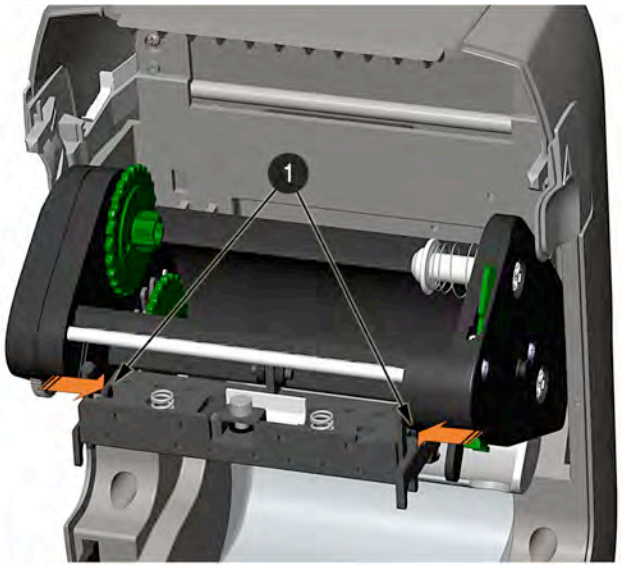

❶	Printhead Shield Tabs

5) Loosen the Printhead Screw and allow the Printhead to fall free.

6) Remove the Printhead Cable.

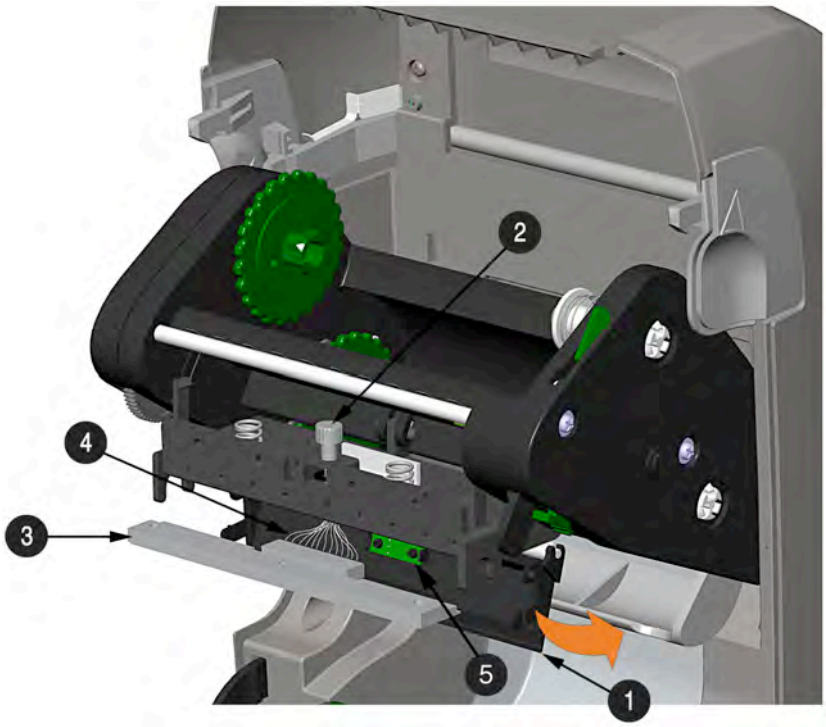

❶	Printhead Shield
❷	Printhead Screw
❸	Printhead
❹	Printhead Cable
❺	Sensor

Installation:

1) Carefully connect the Printhead Cable to the new Printhead.

2) Position the Printhead in the Printhead Carrier and tighten the Printhead Screw.

3) Ensure the Sensor properly seated and rotate the Printhead Shield upward until it snaps into place.

4) Rotate the Printhead Carrier upward until it snaps into place.

5.5 Platen Roller Replacement

The Platen Roller can be easily removed for cleaning, replacement, or clearing media jams.

1) Turn OFF the printer and remove the media if installed.

2) Lift up on the two Platen Roller Tabs.

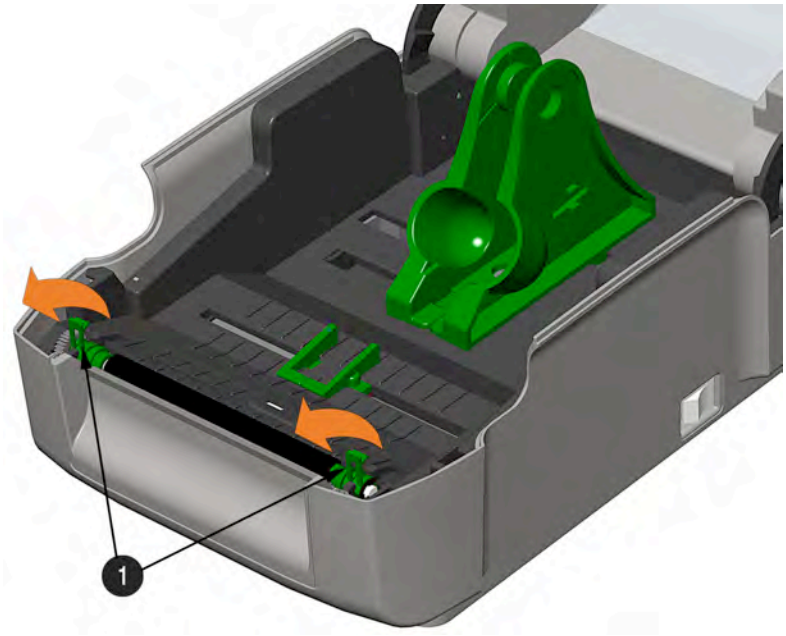

❶ Platen Roller Tabs

3) Remove the Platen Roller Assembly from the printer.

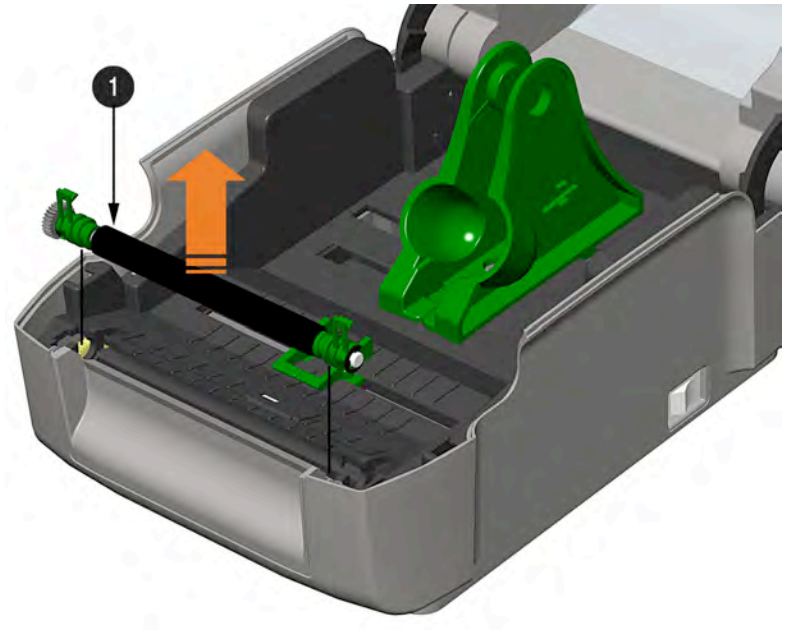

❶ Platen Roller Assembly

Installation:

1) Position the Platen Roller Assembly into the printer.

2) Rotate the two Platen Roller Tabs downward until they snap into place.

6 Troubleshooting

6.1 Introduction

Occasionally, situations arise that require troubleshooting. Possible problem situations and potential solutions are listed below. Contact a qualified technician for problems that persist or problems not covered in this section.

6.2 Troubleshooting Tips

The following section lists the symptoms and the associated page numbers of the topics covered. While not every situation is addressed, you may find some tips helpful. After a correction action is taken press the FEED Button to clear the alarm.

Unacceptable print quality:

- Dirty printhead: Clean the printhead (see Section 5.2).
- The temperature setting may be incorrect for the media being used: Use the software program or DPL commands adjust the Heat Setting and Print Speed.
- Faulty printhead: Replace it (see Section 5.5) or call for service.

The printer does not print or prints several tickets at once:

- The tickets are incorrectly loaded: See the loading instructions on the inside cover of the printer, or in Section 2.3.
- The media is not calibrated: Calibrate it (see Section 3.5).
- The media sensor or sensor circuitry may be defective: Call for service.

Skips every other ticket(print quality is good, but every other ticket is skipped):

- The ticket is formatted too close to the top edge of the ticket: Leave white space equal to 8-dot rows (about .02 inch [.5mm]) at the top of the ticket.
- The media is not calibrated: Calibrate it (see Section 3.5).
- The media sensor or media sensor circuitry may be defective: Call for service.

Unable to print rotations:

- The characters are formatted outside the dimensions of the ticket: Check that the row/column values provide enough room for the height of the image being printed.

Lightprint on the right side of the ticket:

- The printer's cover is not latched down: Latch it.
- The printhead is not properly aligned: Call for service.

Printer fails to power ON:

- The AC wall outlet may be faulty: Try another outlet.
- The power supply may be faulty: Replace it.
- Possible defective power switch: Call for service.

Ticket advances 12 inches before a fault indication:

- The media may not be properly loaded: Reload it (see Section 2.3). When loading media ensure that the media hangers and media guides are against the media and that gaps or marks in the tickets are in line with the media sensor.
- The media sensor or media sensor circuitry may be defective: Call for service.

Tickets move excessively from side to side during printing:

- The media may not be properly loaded: Reload it (see Section 2.3). When loading media ensure that the media hangers and media guides are against the media and that gaps or marks in the tickets are in line with the media sensor.

6.3 Hex Dump Mode

The Hex Dump Mode is a useful tool for diagnosing problems, including communication and DPL™ syntax errors, allowing a comparison of input strings (sent by host) to output data (received by printer). To decode this information, the *Programmer's Manual* is an essential reference. This output can be used for debugging the ticket format. In addition, by repeatedly sending a format, this mode can uncover handshaking problems (if they exist). Handshaking problems are identified by sections of missing data in the character string.

To print the Hex Dump Ticket:

To begin, go to the Diagnostics menu and enable Hex Dump Mode; see Section 4.4. Exit the menu and save the changes. Now, 'HEX DUMP MODE' will be indicated by the display and all data sent to the printer will now be output in hexadecimal code, along with the printable ASCII equivalents, as shown below. To exit Hex Dump Mode, re-enter the Diagnostics Menu and disable the Hex Dump Mode, exit the menu, then save the changes.

The figure below is a sample Hex Dump Ticket. After sending a ticket format to the printer, the hex code output will be immediate. As a final note, many software programs use bit mapping to construct the ticket, making diagnosis difficult. Contact Worldwide Ticketcraft Technical Support Toll Free 800-284-8728 with any questions.

```
0000  02 4C 0D 44 31 31 0D 31  ^L.D11.1
0008  36 31 31 30 30 30 30 33  61100003
0010  32 30 30 30 31 30 46 4F  200010FO
0018  4E 54 20 36 3A 20 41 4C  NT 6: AL
0020  4C 20 56 41 4C 49 44 20  L VALID
0028  20 20 20 20 20 20 20 20
0030  20 20 20 0D 31 36 31 31     .1611
0038  30 30 30 30 32 38 30 30  00002800
0040  30 31 30 20 20 20 20 20  010
0048  20 20 20 43 48 41 52 41     CHARA
0050  43 54 45 52 53 3A 0D 31  CTERS:.1
0058  36 31 31 30 30 30 30 32  61100002
0060  34 30 30 30 31 30 23 24  400010#$
0068  25 26 28 29 2A 2B 2E 2D  %&()*+.-
```

A Specifications

Mechanical

Width	WWTC.iJP Models: 8.01 inches (20.4 cm) Pro+ Models: 8.54 inches (21.7 cm)
Depth	WWTC.iJP Models: 11.10 inches (28.2 cm) WWTC.iJP2 Models: 14.17 inches (36.0 cm)
Height	WWTC.iJP Models: 7.36 inches (18.7 cm) WWTC.iJP2 Models: 9.45 inches (24.0 cm)
Weight	WWTC.iJP Models:5.25 pounds (2.4 kg) WWTC.iJP2 Models: 7.75 pounds (3.5 kg)
Operating Temperature	40° to 95° F (4° to 35° C)
AC Input Voltage	Power Supply: 105 VAC to 250 VAC / 50-60 Hz

Printing

Print Method	Direct Thermal; Thermal Transfer (optional)
Print Speed	203 DPI Models: 2 - 6 IPS (50.8–152.4mm/s) 300 DPI Models: 2 - 5 IPS (50.8–127mm/s)
Resolution	203 DPI Models: 203 DPI (8 dots/mm) 300 DPI Models: 300 DPI (11.8 dots/mm)
Tear Bar	Tear up
DRAM Memory	16MB
FLASH Memory	64MB

Media / Ribbon

Media Types	Roll-Fed, Die-Cut, Continuous, Fan-Fold
Max. Media Width	4.4 inches (110mm)
Min. Media Width	0.75 inches (19mm)
Max. Print Width	203 DPI Models: 4.25 inches (108mm) 300 DPI Models: 4.12 inches (106mm)
Print Length Range	.236 – 99 inches (6 - 2514mm)
Minimum Ticket Height	Tear: 0.5 inches (12mm) Peel: 1.0 inches (25mm) Cut: 1.18 inches (30mm)
Media Thickness Range	.0025 - .01 inches (.064 - .254mm); *up to .005 inches (.127mm) with optional Cutter*
Media Supply Roll Capacity	WWTC.iJP Models:5 inches (127mm) O.D. on a 1 inch (25.4mm) core WWTC.iJP2 Models: 7.2 inches (182.9mm) O.D. on 3 inch (76.2mm), 1.5 inch (38.1mm), or 1 inch (25.4mm) cores
Ribbon Width Range	½” Core Ribbons Ribbon Core Width: 4.3 inches (110mm) Ribbon Width: 1.0 - 4.3 inches (25 - 110mm); Centered on core 1” Core Ribbons (with Ribbon Core Adapters, see section 2.4.1.) Ribbon Core Width: 1.0 - 4.3 inches (25 - 110mm); Centered on Ribbon Core Adapters Ribbon Width: 1.0 - 4.3 inches (25 - 110mm); Centered on core
Ribbon Roll Capacity	0.5” (13mm) core with 361’ (110m) long ribbon or 1" (25mm) core with 984' (300m) long ribbon

Communications

Interface Ports (standard)	USB, RS-232 (DB-9), IEEE 1284 Type C compliant mini-Centronics parallel, and 10/100 Wired LAN
Baud Speed	600 to 38,400 bits per second (BPS)
Handshaking	Xon/Xoff, CTS, DTR
Parity	Even, Odd, or None
Stop Bits	1 or 2
Data Bits	7 or 8

Fonts

9 Bit Mapped Fonts rotated 0, 90, 180, and 270 degrees.

Embedded Bar Codes

32 embedded barcodes (see the *Programmer’s Manual* for a detailed listing).

Approved Media

To achieve optimum print quality and maximum printhead life, Worldwide Ticketcraft specifies the use of Worldwide Ticketcraft brand media and ribbons. These supplies are specially formulated for use in our printers; use of other supplies may affect the print quality, performance, and life of the printer or its components. For a current list of approved media and ribbons for use in direct thermal and thermal transfer applications, please contact a Media Representative at (407) 523-5650.

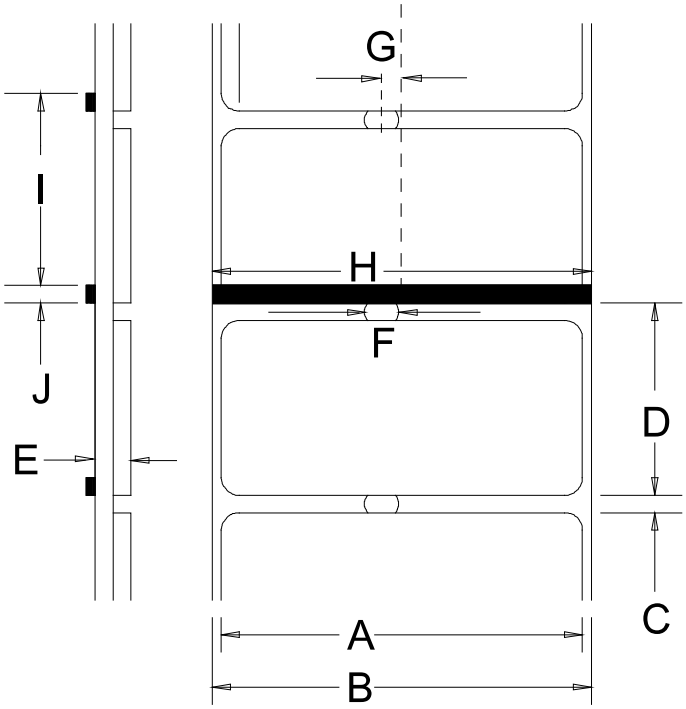

	Description	Max [1]	Min [1]
A	Ticket width	203 DPI: 4.25 300 DPI: 4.12	.75
B	Backing width	4.4	.75
C	Gap between tickets	.25	.10
D	Ticket length	24[3]	.25[4]
E	Total thickness	.010[6]	.0025
F	Notch opening width	--	.20
G	Distance from the center of the media to the center of media sensor aperture. The distances differ for "right of center" and "left of center" and are dependant on whether transmissive or reflective media is being used.	Transmissive (Gap/Hole/Notch): 42mm to left and 34mm to right Reflective (Bar/Hole/Notch): 58mm to left and 38mm to right	
H	Reflective mark width[2]	4.4	.50
I	Distance between reflective marks	24[3]	.25[5]
J	Reflective mark length	.25	.10

[1] Units of measure are in inches.
[2] The reflective (black) mark must be carbon based, placed on the backside of the stock, and the reflectance shall be less than 10% at wavelengths of 950 and 640 nm.
[3] The ticket length may vary up to 99 inches with printable area not exceeding the maximum ticket length.
[4] This distance is inclusive of the minimum gap between tickets. Min length of 1.25 inches (31.8mm) with optional Cutter installed.
[5] This distance is inclusive of the minimum reflective mark.
[6] .007 inches (.117mm) w/Standard Cutter.

B Wireless and Wired LAN Setup

B.1 Network Card Setup

Whether a wired or wireless connection is intended, it is recommended to establish a wired connection to the printer first. This will allow access to the printers' internal web pages to configure the settings necessary for a typical wireless connection.

The printer makes IP requests at power-up, so before making a network connection to the printer consider how your IP addressing needs to be assigned. The IP addressing of the printer can be configured in one of two ways: Using one static IP Address or Using IP Discovery (DHCP, BootP, or RARP). **At factory default settings IP DISCOVERY is ENABLED (DHCP).**

1. With Printer Off, connect the network cable then turn on Printer.
2. The printer will now search for a DHCP server. Allow up to 90 seconds for the printer to retrieve an IP address.
3. At this point it is recommended to print a Network Report. This Network Report is generated by the printer and lists important default information such as the IP and MAC Addresses as well as SSID for wireless equipped cards. To print the 'Network Report':

   Press the ▲ button to highlight the 'TEST' menu branch and then press the button.

   Using the ▼ button, scroll to Network Report, and then press the button.

   When prompted choose either "View" (to view the information on the display) or "Print" (to print the information).

The information on this ticket will vary depending on your configuration and firmware version.

4. Verify the printer has obtained a valid IP address for your network. If a valid IP address was not obtained or you wish to use a different static address this can be set via the printer's front panel.

   Enter the printer's menu and navigate to the Communications>Network/Bluetooth>Wired Ethernet menu branch.

   - Set the "IP Discovery" menu item to "Use Static Addresses".
   - Set the "IP Address" menu item to desired value, continue the same procedure with "Subnet Mask" and "Default Gateway" menu items if necessary. Exit the printers menu. Cycle power to the printer, upon start-up the printer will connect to the network using the new parameters you provided.

Once the previous steps have been successfully completed you may now use the IP Address to:

- If your printer is equipped with wireless capabilities, browse to the printer's internal web pages for wireless/advanced configuration. **See Section Appendix B.2 forWireless Setup**.

-or-

- Install a printer driver, and start printing from your Windows® applications. **See Section 2.2.3, Installing the Printer Driver.**

B.2 Wireless Setup

1. Open your web browser. Type in the IP Address assigned to the printer. The printers default IP address is: 192.168.10.26.

☑ If a different IP Address has been assigned to the printer, make sure to enter the correct IP address.

The following page will appear:

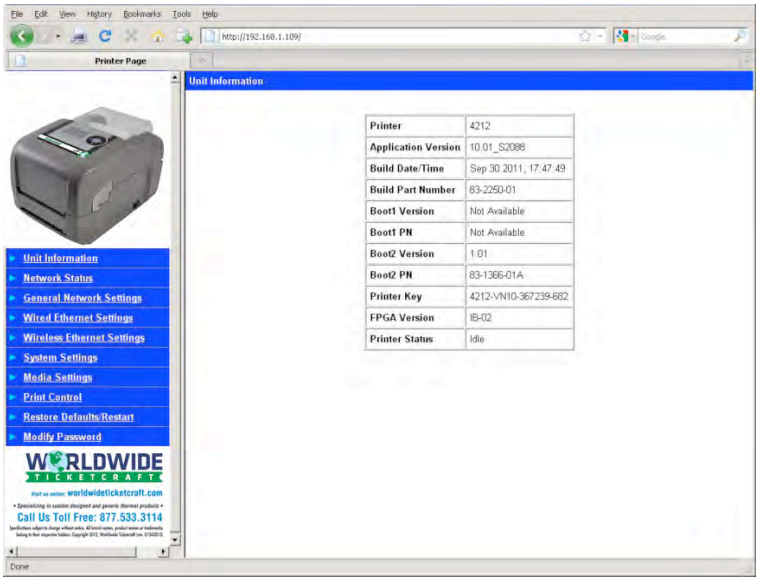

The printer's internal web pages are divided into 10 pages that are accessible via the navigation bar on the left-hand side.

Most of the items on these pages mimic the printer's internal menu. For more information on the function of these settings see the corresponding function in Chapter 4.

☑ You must provide a password to change any settings. The default password is "**sysadm**".

☑ If any address parameters were changed such as IP address, subnet or gateway, the printer might not be viewable from the current host if they are no longer on the same subnet.

B.2.1 Wireless Setup – Infrastructure

After a successful setup is made via a wired connection, the Wireless connection (if equipped) can now be configured in infrastructure mode using a static or DHCP issued IP address.

1. Open your web browser. Type in the IP Address of the printer. The Default IP is: 192.168.10.26.

> ☑ If a different IP Address has been assigned to the printer, make sure to enter the correct IP address.

A page similar to the right will appear:

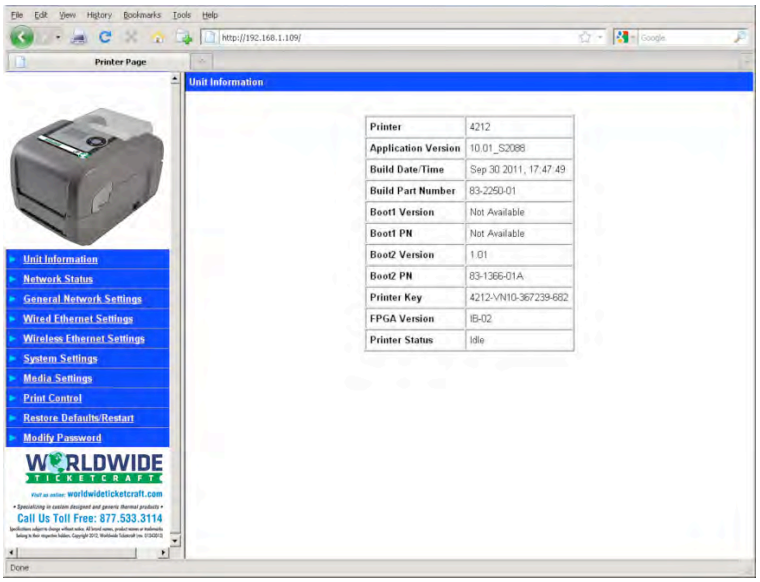

2. Click on the "Wireless Ethernet Settings" menu item on the left side of the screen. Locate and set the following items:

   - In the "Acquire Address Method" section, select the "Use DHCP" radio button.

   For static IP setup:
   - In the "Acquire Address Method" section, select the "Use Static Addresses" radio button.
   - In the "Static IP Addresses" section, enter valid static IP addresses for Printer IP Address, Printer Subnet Mask, and Printer Gateway.

3. Scroll down the page to "Network Type", select "infrastructure" from the drop down box.

4. In the SSID field type the name of the SSID of your access point.

5. Under the "WIFI Security and Authentication," set any security/authentication settings necessary for your network.

6. Scroll down to the bottom of the page, enter the password (default is "sysadm") and click Apply.

7. Click on the "General Network Settings" menu item on the left side of the screen. Locate and set the following items:

8. In the "Network Interface", select the "Wireless Ethernet" radio button

9. Scroll down to the bottom of the page, enter the password (default is "sysadm") and click Apply.

10. Click on the "Restore Defaults/Restart" menu item on the left side of the screen. Be sure that Restart Printer is displayed in the "Action to Execute:" drop down box. Enter the password at the top of the page (default is "sysadm") and click Execute to restart the printer.

The printer will now search for a server. Allow up to 90 seconds for the printer to retrieve an IP address.

At this point it is recommended to print a Network Report. This Network Report is generated by the printer and lists important default information such as the IP and MAC Addresses as well as SSID for wireless equipped cards. To print the 'Network Report':

Press the ▲ button to highlight the 'TEST' menu branch and then press the button.

Using the ▼ button, scroll to Network Report, and then press the button.

When prompted choose either "View" (to view the information on the display) or "Print" (to print the information).

Once the previous steps have been successfully completed you may now use the IP Address to install a printer driver, and start printing from your Windows® applications. See section B.3, Installing the Printer Driver.

The information on this ticket will vary depending on your configuration and firmware version.

B.2.2 Wireless Setup – Ad-Hoc

After a successful setup is made via a wired connection, the Wireless connection (if equipped) can now be configured in ad-hoc mode using a static IP address. To configure the wireless card in Ad-hoc mode, you must configure your host computer to match the IP settings of the printer. Refer to your operating system's or your wireless network card documentation for information on how to configure your computer.

1. Open your web browser. Type in the IP Address of the printer. The Default IP is: 192.168.10.26.

☑ If a different IP Address has been assigned to the printer, make sure to enter the correct IP address.

A page similar to the right will appear:

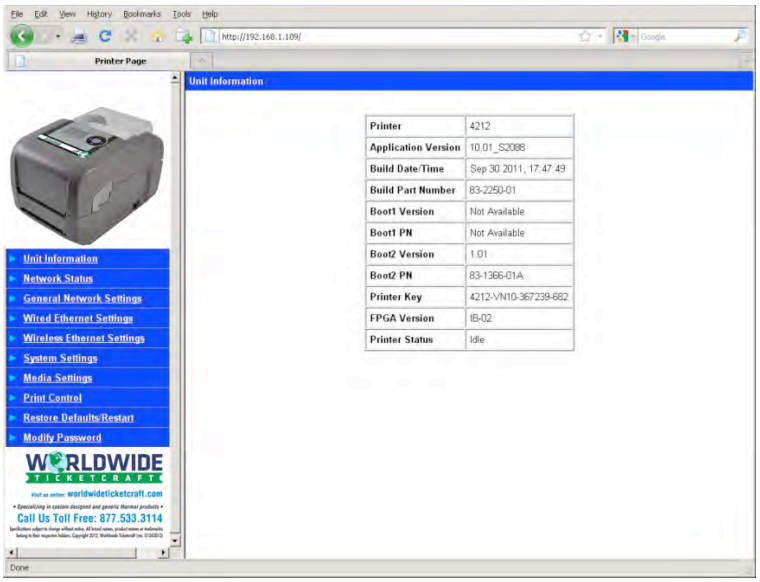

2. Click on the "Wireless Ethernet Settings" menu item on the left side of the screen. Locate and set the following items:

   - In the "Acquire Address Method" section, select the "Use Static Addresses" radio button.
   - In the "Static IP Addresses" section, enter valid static IP addresses for Printer IP Address, Printer Subnet Mask, and Printer Gateway.

3. Scroll down the page to “Network Type”, select “Ad-hoc” from the drop down box.

4. In the SSID field type the name of the SSID you wish to assign to the printer.

5. Under the “WIFI Security and Authentication”, set any security/authentication settings necessary for your network.

6. Scroll down to the bottom of the page, enter the password (default is “sysadm”) and click Apply.

7. Click on the “General Network Settings” menu item on the left side of the screen. Locate and set the following items:

8. In the “Network Interface", select the “Wireless Ethernet” radio button

9. Scroll down to the bottom of the page, enter the password (default is “sysadm”) and click Apply.

10. Click on the “Restore Defaults/Restart” menu item on the left side of the screen. Be sure that Restart Printer is displayed in the “Action to Execute:” drop down box. Enter the password at the top of the page (default is “sysadm”) and click Execute to restart the printer.

11. The printer will now search for a server. Allow up to 90 seconds for the printer to retrieve an IP address.

12. From Windows, you may now “View Wireless Networks”. From the list of available wireless networks select the printer that you wish to connect to and then click on the Connect button.

    If you do not see your printer listed be sure you have the host computer configured for Ad-hoc wireless networks.

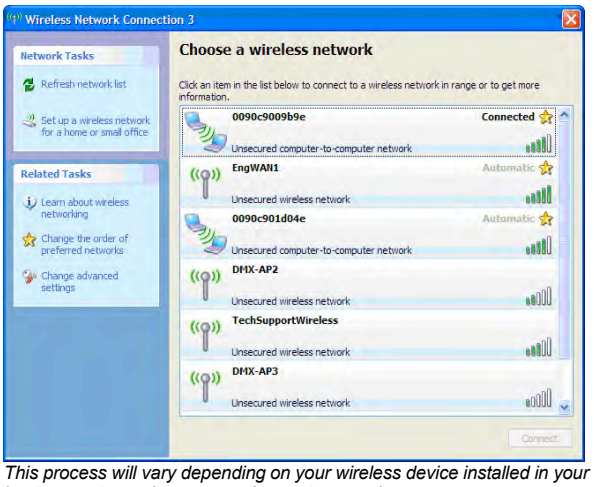

This process will vary depending on your wireless device installed in your host computer and your operating system version.

Once the previous steps have been successfully completed you may now use the IP Address assigned to the printer to install a printer driver, and start printing from your Windows® applications. See Appendix E, FGL Emulation.

C Bluetooth Setup

C.1 Bluetooth Setup

Bluetooth connection parameters can be set using the printer Menu System.

1) In the printer Menu System go to
Menu>Communications>Network/Bluetooth>Active Interface>Bluetooth

2) After Bluetooth is selected the printer display will briefly show the message "OK" and then return to the Menu>Communications>Network/Bluetooth menu.

3) From the Menu>Communications>Network/Bluetooth menu arrow down to Bluetooth to set up the printer for Bluetooth. Change (or confirm) the following parameter settings in the Bluetooth menu:

   Bondable: Yes

   Connectable: Yes

   Discoverable: Yes

   PassKey: Default '0000' (must match entry used on host computer)

For connection to the printer please refer to the instructions included with your Bluetooth adapter or host computer/handheld.

D Ticket Set Up

☑ Be sure to correctly position the Adjustable Media Sensors as described in Section 5.4.

D.1 Adjustable Media Sensor

The optional Adjustable Media Sensor (AMS) allows the printer to accept a wider variety of media configurations. The table below defines general AMS positions for various media and Top of Form (TOF) types.

AMS Positioning		
Media Type	**Sensor Location**	**TOF Sensing Method**
Black Bar	Center of the Black Mark	Reflective
Continuous	Any location in the media path with both sensors aligned.	Continuous (Only detects out of media)
Die-Cut	Any location within the media path where the gap between the tickets crosses the sensors. (top and bottom sensors must be aligned)	Separate Die Cut and Notched. Use this for the Notched or Hole Media
Notched/Hole	Center of the Notch or Hole	Gap (primary) Reflective (secondary)

Position the AMS as follows:

1) On the Bottom AMS Sensor, identify the proper Indicator for use with your media.

❶	Gap or Notch Indicator
❷	Reflective (Mark) Indicator

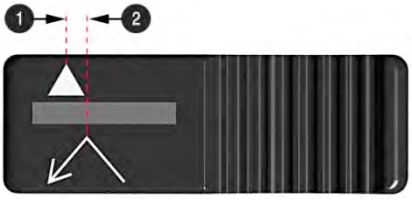

2) Slide the Bottom AMS sensor so the Indicator is in line with the center of the notch, gap, or reflective (mark) of the installed media.

3) Slide the Top AMS Sensor over to the same setting as the Bottom AMS Sensor, (this is not necessary if using reflective media).

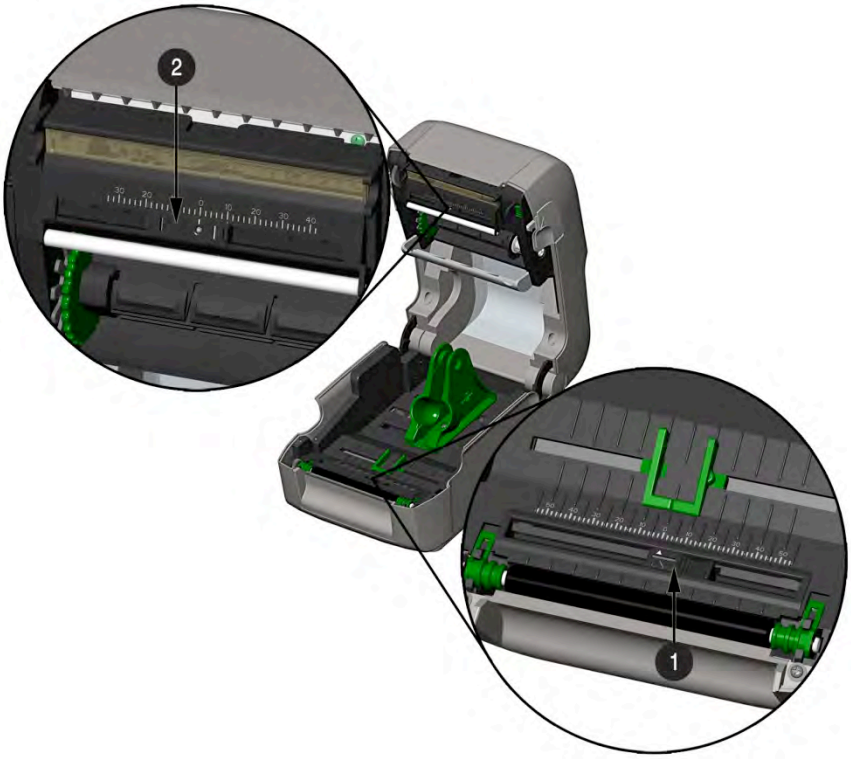

❶	Bottom AMS Sensor
❷	Top AMSSensor

For connection to the printer please refer to the instructions included with your Bluetooth adapter or host computer/handheld.

D.2 Setting Up Printer For Ticket Dimensions

The WWTC.iJP and WWTC.iJP2 printers are set up at the factory for a WorldWide TicketCraft 2” x 5.5” Ticket. When using tickets with different dimensions or Black Mark positions it is first necessary to adjust the printer settings. The settings may be changed either by using the Windows Driver included on the Accessories USB Flash Drive, or by using the printer menu system via the front panel display.

☑ The Menu System must be set to Advanced Menu to adjust some of the following settings via the front panel display. Advanced Menu is found in the Menu System under System Settings/Menu Mode.

1.Calculate the following dimensions as shown in the diagram.

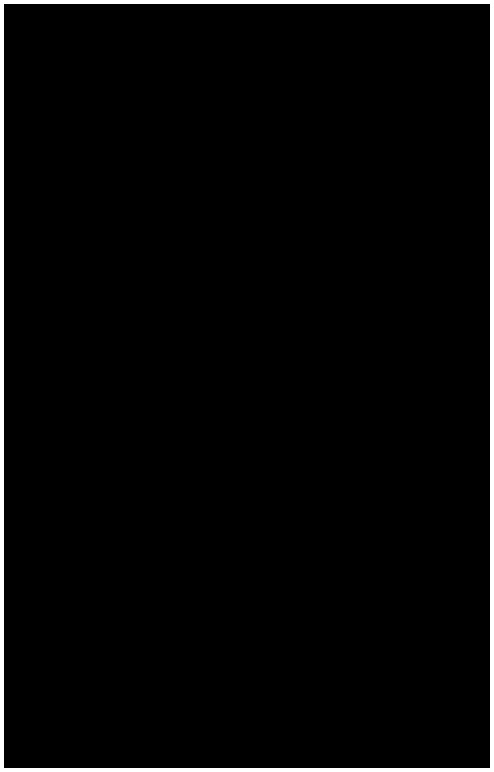

❶	Ticket Width
❷	Ticket Length
❸	Present Adjust (Tear/Cut Position)
❹	Row Adjust (Start of Print Position)

The unit of measure for Ticket Width and Ticket length are in inches. The Present Adjust and Row Adjust values are in dots and will differ depending on whether your printer has a print density of 203 dots per inch or 300 dots per inch. The version of your printer may be found by printing a test ticket described in Section 2.3 “Loading Media”.

To calculate these dimensions perform the following.

1. Take the measurements shown in the diagram❸ and ❹in inches.
2. Convert the fractional portion of the measurement into a decimal.
3. Multiply the dimension by 203 for WWTC.iJP or 300 for WWTC.iJP 300.

Examples:

WWTC.iJP
❸Present Adjust (Tear Position) measurement = 2¼”= 2.25 x 203 = **457**
❹Row Adjust (Tear Position) measurement = 3 1/8”= 3.125 x 203 = **674**

WWTC.iJP 300
❸Present Adjust (Tear Position) measurement = 2¼”= 2.25 x 300 = **675**
❹Row Adjust (Tear Position) measurement = 3 1/8”= 3.125 x 300 = **938**

Adjusting ticket settings using the printer Menu System.

The following table shows where these adjustments can be found using the printers Menu System via the front panel display.

Ticket Settings Adjustment via Menu System		
Dimension	**Menu System Category**	**Setting**
❶ Ticket Width	Media Settings	Label Width
❷ Ticket Length	Media Settings	Label Length
❸ Row Adjust	Print Control/Custom Adjustments	Row Adjust
❹ Present Adjust	Print Control/Custom Adjustments	Present Adjust

Adjusting ticket settings using the Windows Driver.

☑ The following Windows Driver instructions are not valid when connected via Parallel cable. Refer to

The Window driver may be used to adjust the ticket settings and most other printer settings. To access the Windows driver (May vary depending on Windows OS):

1. Install Windows driver. See section 2.2.3.
2. In Windows open Control Panel and then "Printers and Faxes"
3. "Right Click" on the printer and select "Properties" (for Windows 7 and Windows 8 select Printer Properties)
4. Click on the "tools" tab.

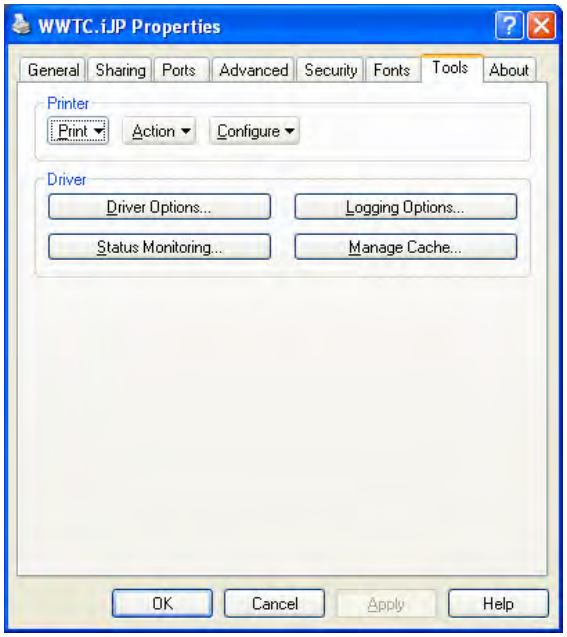

5. Click on the "Configure" pull down menu and select Configure Printer.

6. Adjust the Width, Length, Row Adjust and Column Adjust values based on the dimensions of the desired ticket type.

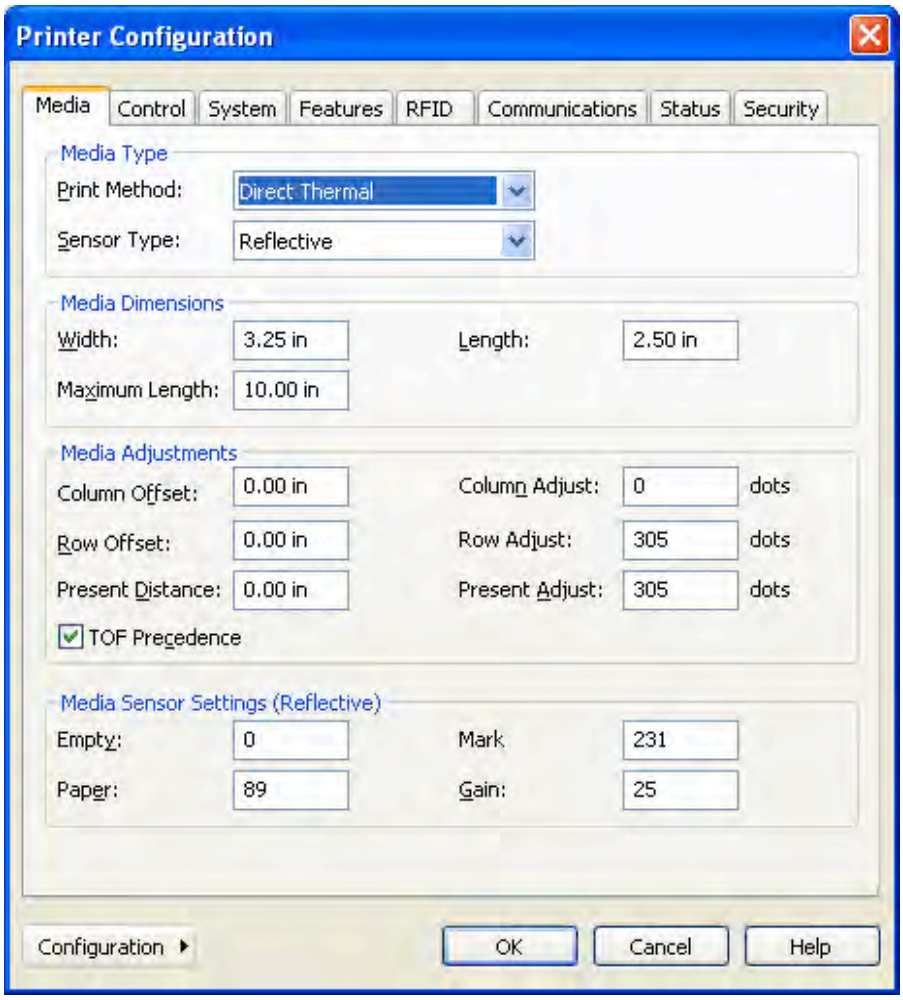

7. Click "OK" and close the Windows Driver.

8. Load the ticket stock and follow the standard "Loading Media" instructions described in Section 2.3.

E FGL Emulation

☑ The printer must be in DPL mode in order to perform the Ticket Set Up procedure using the Windows Driver. Always perform Ticket Set up procedure while printer is set to DPL and then switch to FGL (PL-B) if desired.

E.1FGL Emulation Description

The WWTC.iJP series printers have a number of programming language emulations including FGL. A programming language is the set of commands that are sent to the printer to create and print the desired labels. The standard resident WWTC.iJP printer language is DPL.

It is often difficult for customers to modify their host computer system software to support an alternate programming language. WWTC.iJP emulations provide an easy solution for integrating WWTC.iJP printers into facilities currently using other brand printers employing FGL or other languages. These emulations are true emulations; accepting commands and formatting them directly to the printed labels.

The wide ranges of printer models employing FGL language have subtle differences both in physical attributes and how some commands are interpreted. Command differences often appear when program language liberties were used to define a label. Worldwide Ticketcraft has made every effort to implement parameters to help compensate for these differences.

E.2Enabling FGL Emulation (PL-B)

The WWTC.iJP FGL Emulation is named PL-B. To enable PL-B use the printer Menu System via the front panel display. Navigate to:

System Settings>Input Mode>PL-B

Choose PL-B and save changes when exiting Menu System.

E.3 PL-B (FGL) Printer Setting Adjustments

Due to the inherent nature of different printer models, it may be necessary to adjust the WWTC.iJP printer's menu settings to achieve an optimum match to the specific application. These settings are common between all emulations and are usually used to address a physical difference between the new printer and the one that it is replacing.
a. PRINT CONTROL>CUSTOM ADJUSTMENT>DARKNESS/CONTRAST – Used to adjust print quality either darker or lighter.
b. PRINT CONTROL>CUSTOM ADJUSTMENT>ROW/COLUMN ADJUST – These parameters allow you to shift the image on the media. They are used to move the image slightly up or down, right or left in order to more closely match the Zebra printer. There have been issues with the ticket length being long and by using both the row emulation and row adjust settings will allow the format to fit on the ticket. Common values for these parameters are -20 for Row and 10 for the Column Adjust settings.
c. SYSTEM SETTINGS>COLUMN/ROW EMULATION – This setting allows you to alter the formatting of the number of dots per inch. It does this by changing the start position of all text fields, the length of lines and boxes, and the height of barcodes. Note: It does not alter the size of downloaded images, or the length of barcodes or text strings.
d. PRINT CONTROL>TOF PRECEDENCE – This setting stops the printer from printing beyond the edge of the next ticket. Once a ticket edge is detected the printer will stop printing the current ticket, thus preventing overrun into the next ticket and what appears to be skipping. If this corrects the extra ticket, the user may need to examine the ticket format that was causing the skip and make any adjustments in order to verify that all the fields have been printed. If this setting does not work, then the printer will need to be recalibrated for the media that is having the issue.

E.4 PL-B (FGL) and Windows Printer Drivers

The Seagull Scientific Printer Driver installs and operates the same for both PL-B and DPL. PL-B (FGL) applications should install an appropriate FGL printer driver. A USB and Plug n' Play installation requires a slight workaround. Windows® identifies the printer as a WWTC.iJP printer regardless of the selected emulation mode. For these installations, first install, (and leave installed) the WWTC.iJP printer driver to verify all installed hardware is working properly. Once the WWTC.iJP printer driver is installed, verify which port is being used by the driver. Then install the appropriate FGL printer driver selecting the same port as the WWTC.iJP driver. Some of the Driver's Tool Tab functions may not function correctly with PL-B enabled Printers.